제2021 - 2149913 호

안 전 인 증 서

(사업장명) 극동호이스트(주)

(소 재 지) (15423)경기도 안산시 단원구 해봉로 119, 607B, 4L(성곡동630-2)

위 사업장에서 제조하는 아래의 품목이 산업안전보건법 제84조 및 시행규칙 제110조제1항에 따른 안전인증 심사 결과 안전·보건기준에 적합하므로 안전인증표시의 사용을 인증합니다.

품 목

호이스트 (국내품)

형식,모델(용량,등급)/인증번호

KDC10-D (10Ton) / 21-AE2AC-00005

인 증 기 준

고용노동부 고시 제2020 - 41호 (위험기계·기구 안전인증 고시)

인 증 조 건

(15423)경기도 안산시 단원구 해봉로 119, 607B, 4L(성곡동630-2)에서 생산된 동일 형식 제품에 한함

설치장소 : 옥외

2021년 01월 19일

한국산업안전보건공단 이사장

심사결과 통지서

신청인	사업장명	극동호이스트(주)	사업장관리번호	134-81-013350
	사업자등록번호	134-81-01335	대표자 성명	최성찬
	소재지	(15423) 경기도 안산시 단원구 해봉로 119		

안전인증대상 기계·기구명	호이스트 [동일형식인정 - "별첨(5모델)" 참조]		
형 식 (규 격)	KDC10-D	용 량 (등 급)	10 Ton

산업안전보건법 제 84조 및 같은 법 시행규칙 제110조에 따라 실시한

] 예비심사

V] 서면심사

] 기술능력 및 생산체계 심사

] 개별 제품심사

] 개별 제품심사(제작중)

] 형식별 제품심사

결과가 [V] 적 합 / [ ] 부적합 함을 통지합니다.

2020년 06월 05일

인증심사원 이승태 이 승태 (서명 또는 인)

한국산업안전보건공단 이사장

불법복제 및 배포금지

서 면 심 사 서 류

형식 번호 : KDC10-D

극 동 호 이 스 트 ㈜

주소 : 경기도 안산시 단원구 해봉로 119 (성곡동)

TEL : 031) 491 - 5311

FAX : 031) 363 - 3952

192.168.11.51 / 2020-06-11 16:27:42

동 일 형 식 일 람 표

사업장명	극동호이스트㈜	개정일자 및 번호			인증번호	
형식 및 모델		동일 형식 인정범위 및 내역				비 고
형식	모델	권상속도(m/min)	횡행속도(m/min)	양정(m)	횡행방식	
KDC10-D	KDC10-L9-D	MAIN : 4.5 m/min CREEP : 0.45 m/min	고속 : 15 m/min (INVERTER : 2~15 m/min) 저속 : 10 m/min (INVERTER : 2~10 m/min)	9	모터 구동식	횡행 인버터 포함
	KDC10-L12-D			12		
	KDC10-L18-D			18		
	KDC10-L24-D			24		
	KDC10-L30-D			30		

불법복제 및 배포금지

192.168.11.51 / 2020-06-11 16:27:42

불법복제 및 배포금지

제 2012-BJ-0009 호

안 전 인 증 서

정호엔지니어링

경기도 광명시 노동사동 440-5

위 사업장에서 제조하는 아래의 품목이 산업안전보건법 제34조 및 같은 법 시행규칙 제58조의4제4항에 따른 안전인증 심사 결과 안전 · 보건기준에 적합하므로 안전인증표시의 사용을 인증합니다.

품 목

양중기용 과부하방지장치

형식 · 모델/용량 · 등급/인증번호

형식·모델	용량·등급	인증번호
JDL-100	J-2	12-AV2BJ-0009

인 증 기 준

방호장치 의무안전인증 고시(고용노동부고시 제2010-36호)

인 증 조 건

아래 주소에서 생산되는 제품에 한함.

정호엔지니어링, 경기도 광명시 노동사동 440-5

2012년 06월 11일

한국산업안전보건공단 이사장

192.168.11.51 / 2020-06-11 16:27:42

형식번호	KDC10-D
모 델 명	KDC10-L9-D

NO	DESCRIPTION	MATERIAL	Q'TY	SIZE	REMARK
1	LOAD LIMITER	-	1	-	
2	PUSH BUTTON S/W	-	1	-	
3	SAFETY LATCH	SS275	1	-	
4	UPPER LIMIT S/W	SS275	1	-	
5	T/S RAIL	-	-	15KG/M	

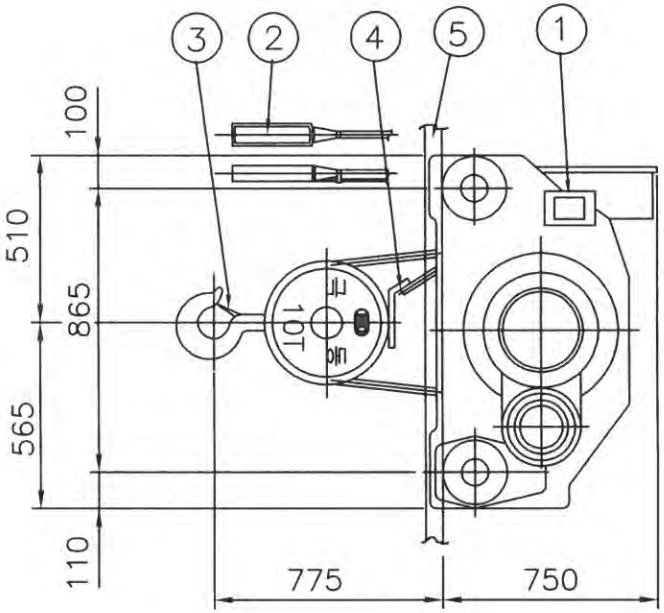

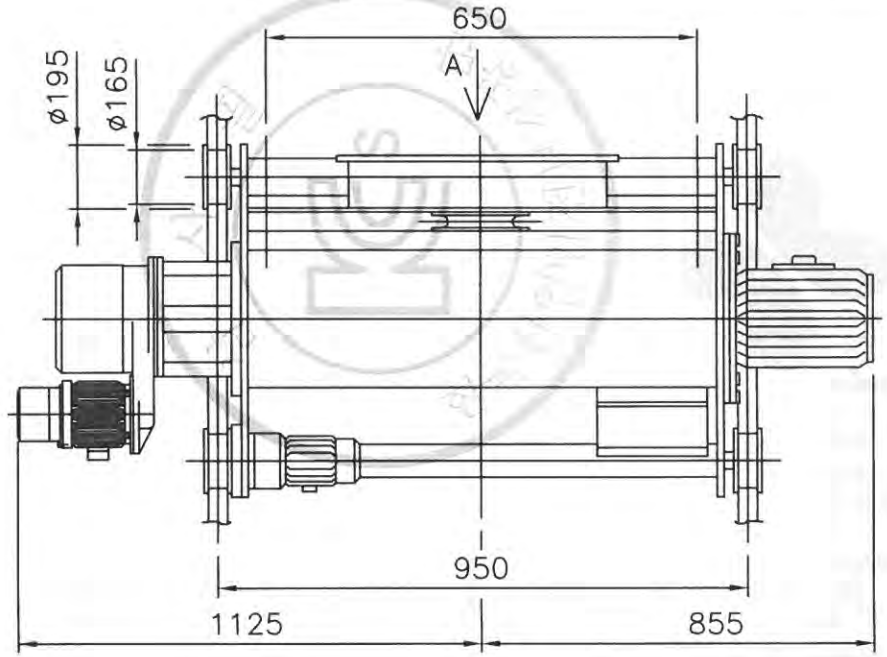

극동호이스트
제한하중
10000Kg
모델: KDC10-L9-D

VIEW A

SPECIFICATION			
HOISTING LOAD		10000 KG	
TESTING LOAD		12500 KG	
LIFT		9 M	
RATING		30 MIN	
HOISTING		SPEED	4.5 / 0.45 M/MIN
		MOTOR	9/1.1 KW x 8P
TRAVER-SING	HIGH	SPEED	15 M/MIN
		MOTOR	0.75KW x 4 P
	LOW	SPEED	10 M/MIN
		MOTOR	0.5KW x 6 P
WIRE ROPE		(6x37) ø16 x 4FALLS	
POWER SOURCE		AC3øx220V(380,440,460,480V)x60Hz	
COLOR		10 B 3/5	
WEIGHT		1145 KG	

REV	DATE	DESCRIPTION	DRAWN	CHECK	APPRVD
A	21.APR.2020	REDRAWING	K.H.Han	-	-

PROJECT

CLIENT

MANUFACTURER: 극동호이스트 주식회사 KUKDONG HOIST CO., LTD.

TITLE: ASSEMBLY DRAWING KDC10-L9-D

SCALE	DWG. NO.	SHT. NO.	REV.
N/S	KDC10D900		

무단배포 및 재제 금지
2020-06-11 16:27:42 / 192.168.11.5

형식번호	KDC10-D
모 델 명	KDC10-L12-D

NO	DESCRIPTION	MATERIAL	Q'TY	SIZE	REMARK
1	LOAD LIMITER	-	1	-	
2	PUSH BUTTON S/W	-	1	-	
3	SAFETY LATCH	SS275	1	-	
4	UPPER LIMIT S/W	SS275	1	-	
5	T/S RAIL	-	-	15KG/M	

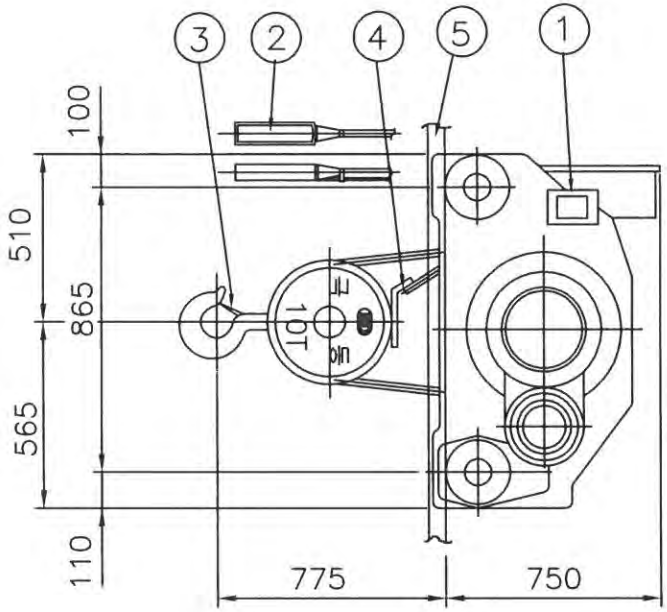

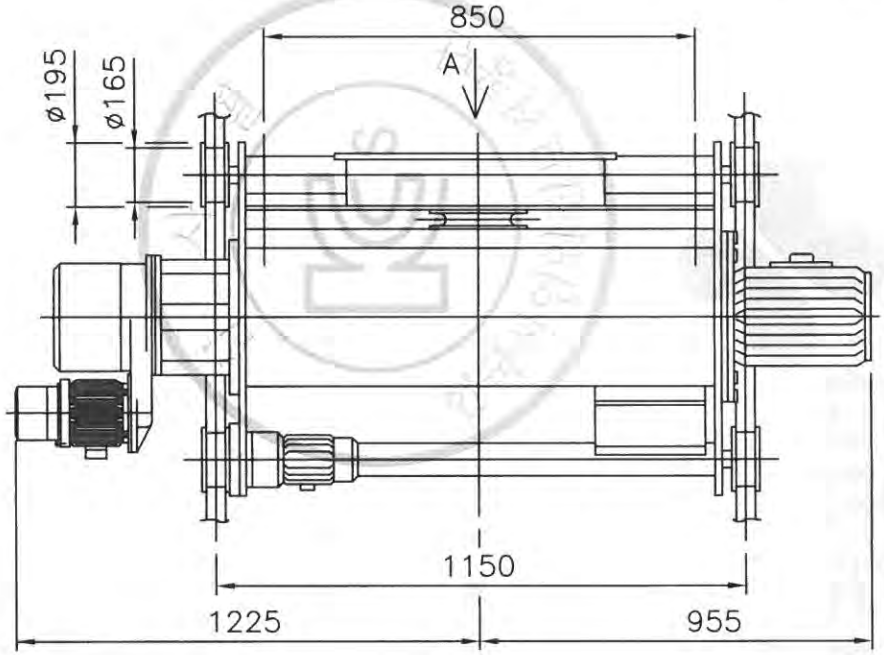

극동호이스트

제한하중

10000Kg

모 델 : KDC10-L12-D

VIEW A

SPECIFICATION			
HOISTING LOAD		10000 KG	
TESTING LOAD		12500 KG	
LIFT		12 M	
RATING		30 MIN	
HOISTING		SPEED	4.5 / 0.45 M/MIN
		MOTOR	9/1.1 KW x 8P
TRAVER-SING	HIGH	SPEED	15 M/MIN
		MOTOR	0.75KW x 4 P
	LOW	SPEED	10 M/MIN
		MOTOR	0.5KW x 6 P
WIRE ROPE		(6x37) ø16 x 4FALLS	
POWER SOURCE		AC3øx220V(380,440,460,480V)x60Hz	
COLOR		10 B 3/5	
WEIGHT		1265 KG	

REV	DATE	DESCRIPTION	DRAWN	CHECK	APPRVD
A	21.APR.2020	REDRAWING	K.H.Han	-	-

PROJECT

CLIENT

MANUFACTURER: 극동호이스트 주식회사 KUKDONG HOIST CO., LTD.

TITLE: ASSEMBLY DRAWING KDC10-L12-D

SCALE	DWG. NO.	SHT. NO.	REV.
N/S	KDC10D1200		

불법복제 및 배포금지

192.168.11.51 / 2020-06-11 16:27:42

형식번호	KDC10-D
모 델 명	KDC10-L18-D

NO	DESCRIPTION	MATERIAL	Q'TY	SIZE	REMARK
1	LOAD LIMITER	-	1	-	
2	PUSH BUTTON S/W	-	1	-	
3	SAFETY LATCH	SS275	1	-	
4	UPPER LIMIT S/W	SS275	1	-	
5	T/S RAIL	-	-	15KG/M	

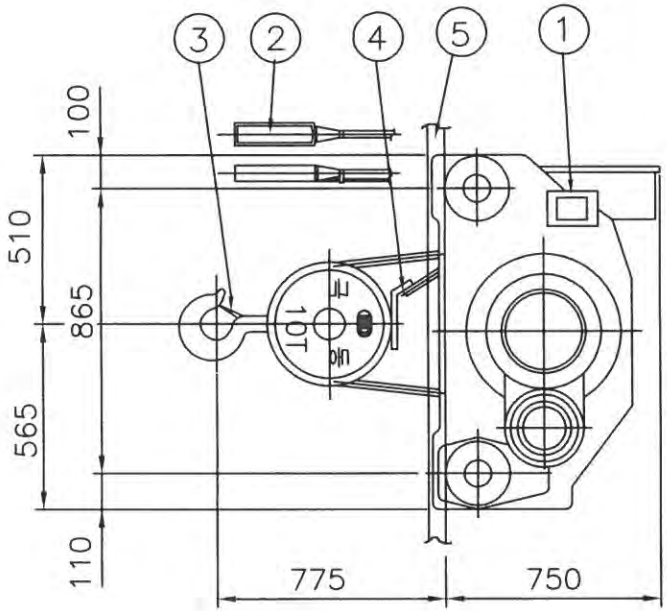

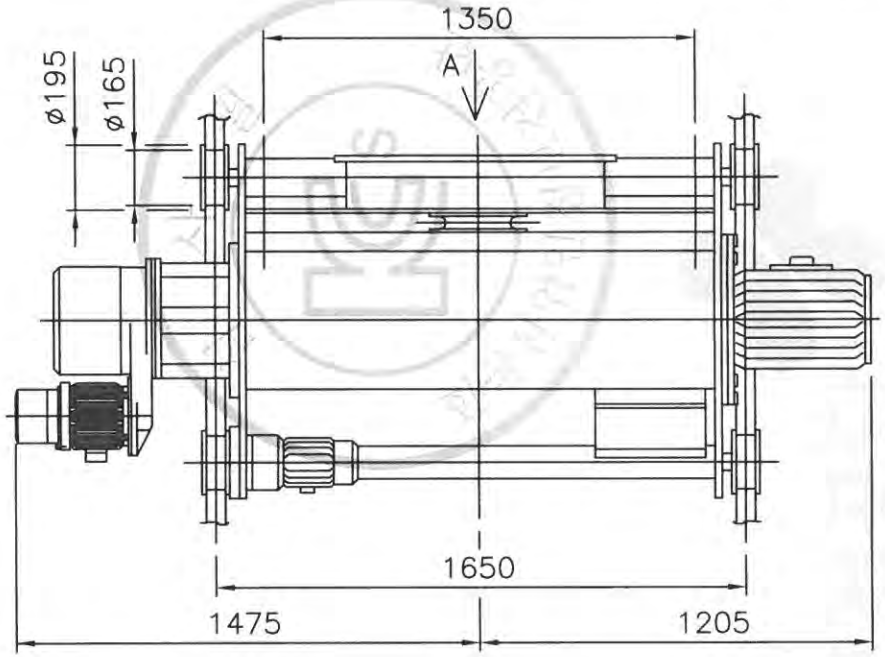

극동호이스트

제한하중

모델: KDC10-L18-D

10000Kg

VIEW A

SPECIFICATION			
HOISTING LOAD			10000 KG
TESTING LOAD			12500 KG
LIFT			18 M
RATING			30 MIN
HOISTING		SPEED	4.5 / 0.45 M/MIN
		MOTOR	9/1.1 KW x 8P
TRAVER-SING	HIGH	SPEED	15 M/MIN
		MOTOR	0.75KW x 4 P
	LOW	SPEED	10 M/MIN
		MOTOR	0.5KW x 6 P
WIRE ROPE			(6x37) ø16 x 4FALLS
POWER SOURCE			AC3øx220V(380,440,460,480V)x60Hz
COLOR			10 B 3/5
WEIGHT			1410 KG

REV	DATE	DESCRIPTION	DRAWN	CHECK	APPRVD
A	21.APR.2020	REDRAWING	K.H.Han	-	-

PROJECT

CLIENT

MANUFACTURER: 극동호이스트 주식회사 KUKDONG HOIST CO., LTD.

TITLE: ASSEMBLY DRAWING KDC10-L18-D

SCALE	DWG. NO.	SHT. NO.	REV.
N/S	KDC10D1800		

불법복제 및 배포금지

192.168.111.51 / 2020-06-11 16:27:42

형식번호	KDC10-D
모 델 명	KDC10-L24-D

NO	DESCRIPTION	MATERIAL	Q'TY	SIZE	REMARK
1	LOAD LIMITER	-	1	-	
2	PUSH BUTTON S/W	-	1	-	
3	SAFETY LATCH	SS275	1	-	
4	UPPER LIMIT S/W	SS275	1	-	
5	T/S RAIL	-	-	15KG/M	

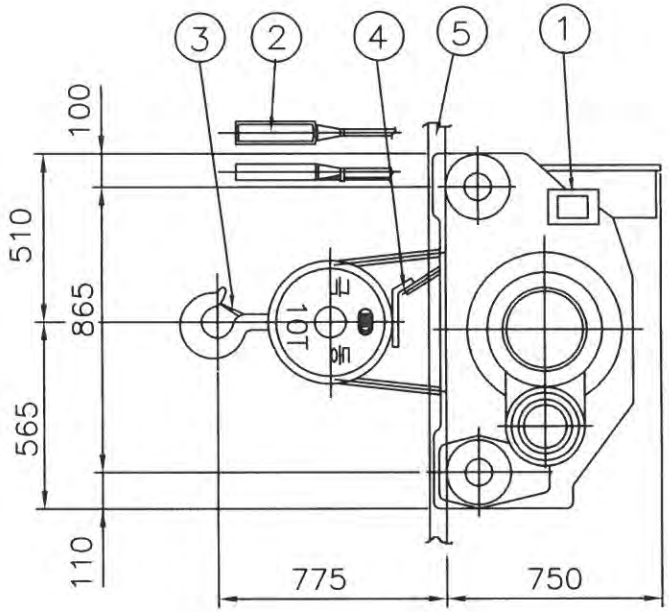

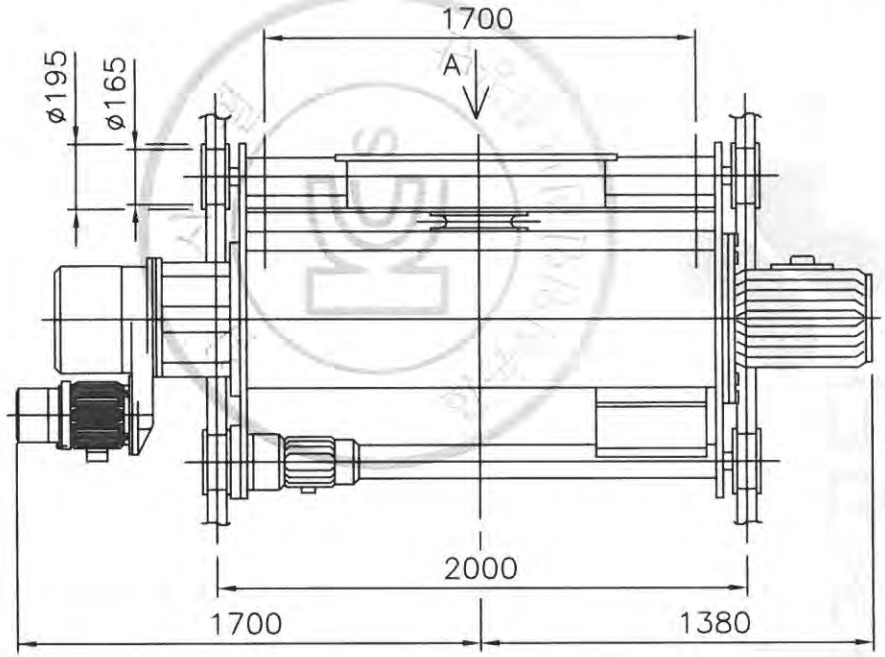

극동호이스트

제한하중

모 델 : KDC10-L24-D

10000Kg

VIEW A

SPECIFICATION			
HOISTING LOAD		10000 KG	
TESTING LOAD		12500 KG	
LIFT		24 M	
RATING		30 MIN	
HOISTING		SPEED	4.5 / 0.45 M/MIN
		MOTOR	9/1.1 KW x 8P
TRAVER-SING	HIGH	SPEED	15 M/MIN
		MOTOR	0.75KW x 4 P
	LOW	SPEED	10 M/MIN
		MOTOR	0.5KW x 6 P
WIRE ROPE		(6x37) ø16 x 4FALLS	
POWER SOURCE		AC3øx220V(380,440,460,480V)x60Hz	
COLOR		10 B 3/5	
WEIGHT		1560 KG	

REV	DATE	DESCRIPTION	DRAWN	CHECK	APPRVD
A	21 APR.2020	REDRAWING	K.H.Han	-	-

PROJECT

CLIENT

MANUFACTURER: 극동호이스트 주식회사 KUKDONG HOIST CO., LTD.

TITLE: ASSEMBLY DRAWING KDC10-L24-D

SCALE	DWG. NO.	SHT. NO.	REV.
N/S	KDC10D2400		

불법복제 및 배포금지

192.168.11.51 / 2020-06-11 16:27:42

형식번호	KDC10-D
모 델 명	KDC10-L30-D

NO	DESCRIPTION	MATERIAL	Q'TY	SIZE	REMARK
1	LOAD LIMITER	-	1	-	
2	PUSH BUTTON S/W	-	1	-	
3	SAFETY LATCH	SS275	1	-	
4	UPPER LIMIT S/W	SS275	1	-	
5	T/S RAIL	-	-	15KG/M	

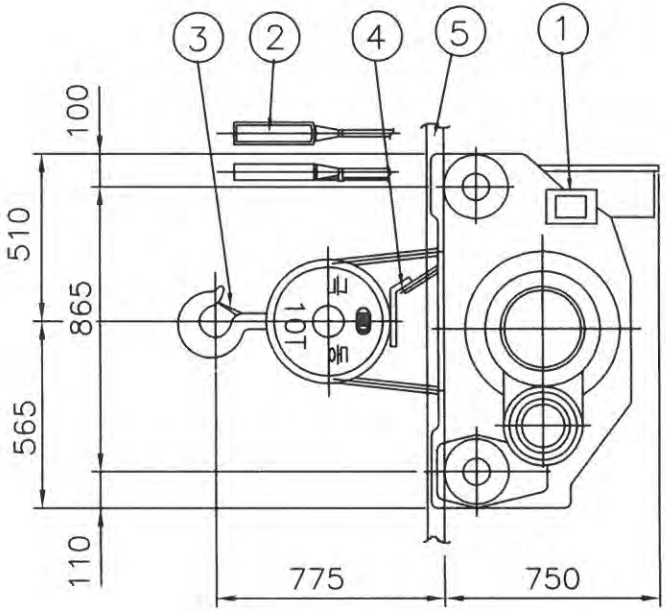

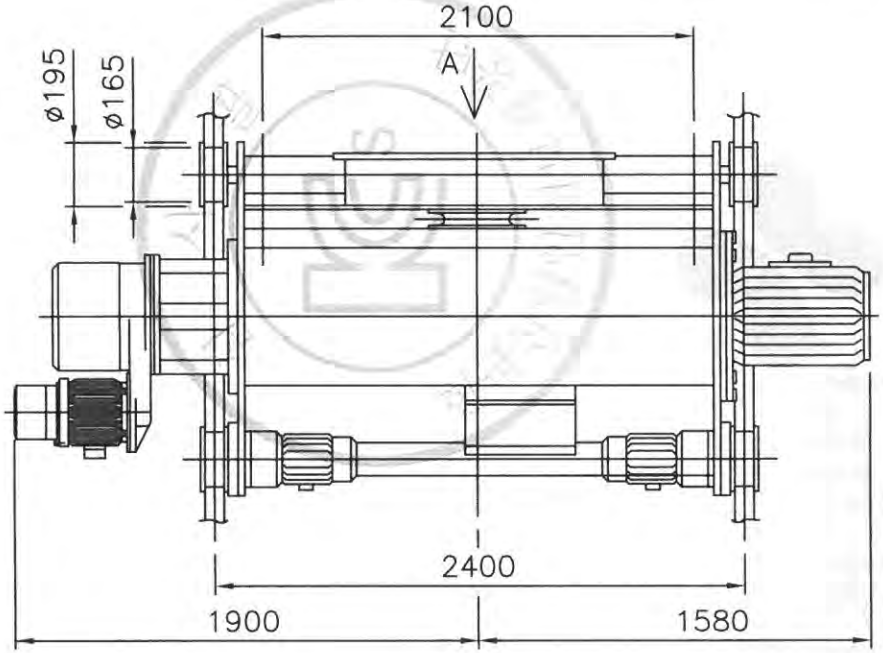

극동호이스트

제한하중

모 델 : KDC10-L30-D

10000Kg

VIEW A

SPECIFICATION			
HOISTING LOAD		10000 KG	
TESTING LOAD		12500 KG	
LIFT		30 M	
RATING		30 MIN	
HOISTING		SPEED	4.5 / 0.45 M/MIN
		MOTOR	9/1.1 KW x 8P
TRAVER-SING	HIGH	SPEED	15 M/MIN (2 UNITS)
		MOTOR	0.75KW x 4 P
	LOW	SPEED	10 M/MIN (2 UNITS)
		MOTOR	0.5KW x 6 P
WIRE ROPE		(6x37) ø16 x 4FALLS	
POWER SOURCE		AC3øx220V(380,440,460,480V)x60Hz	
COLOR		10 B 3/5	
WEIGHT		1720 KG	

REV	DATE	DESCRIPTION	DRAWN	CHECK	APPRVD
A	21.APR.2020	REDRAWING	K.H.Han	-	-

PROJECT

CLIENT

MANUFACTURER: 극동호이스트 주식회사 KUKDONG HOIST CO., LTD.

TITLE: ASSEMBLY DRAWING KDC10-L30-D

SCALE	DWG. NO.	SHT. NO.	REV.
N/S	KDC10D3000		

불법복제 및 배포금지

192.168.11.51 / 2020-06-11 16:27:42

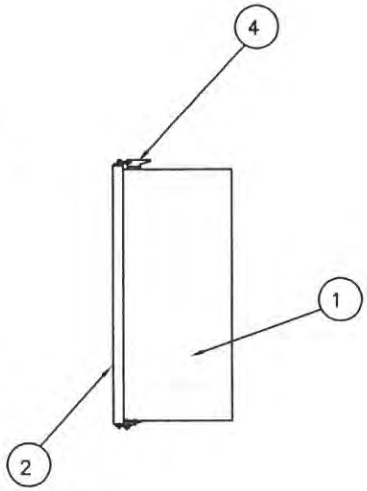

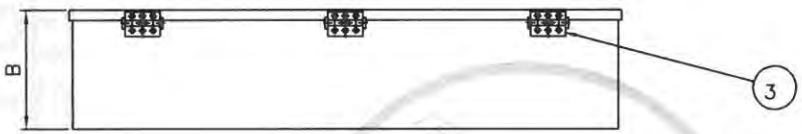

NO	DESCRIPTION	MT'L	REMARKS
1	PANEL CASE	SPC	1.6t
2	PANEL COVER	SPC	1.6t
3	HINGE	PUR'	
4	CLAMP	PUR'	
5	SPONGE	PUR'	

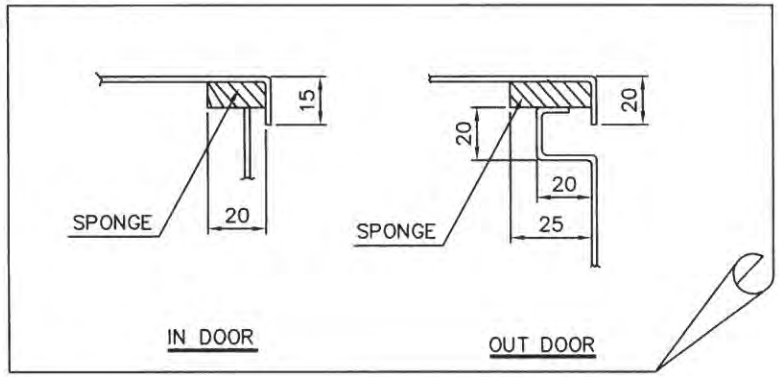

N O T E

1.PROTECTION DEGREE ;

A, INDOOR TYPE : DUST PROOF

B, OUT DOOR TYPE : SPLASH PROOF

2.FINAL PAINTING COLOR (MUNSELL NO.)

A. IN SIDE : 10B 3/5

B. OUT SIDE : 10B 3/5

3.PAINTING THICKNESS : ABOVE 40 um

4.APPLICATION VOLTAGE : 220V,380V,440V,460V,480V

5.제어용 전선 : 1.5sq KIV,HIV

6.외함 개방 구조는 다음과 같다.

1) 외함 개방시 충전 부분이 차단되도록 한다.

2) 외함 개방 후 충전되어있는 부분은 IP2X 이상의 직접 접촉 방호가 되어있을것.

SELECTION	HOIST CAPACITY	DESCRIPTION	IN DOOR			OUT DOOR			REMARK
			A	B	L	A	B	L	
☞	10 TON	CREEP	450	200	710	450	200	710	
		T/S	230	150	350	230	150	350	

REV	DATE	DESCRIPTION	DRAWN	CHECK	APPRVD
A	17.APR.2020	REDRAWING	K.H.Han	-	-

TITLE

HOIST CONTROL BOX LAY-OUT

KDC10-D

CUSTOMER

극동호이스트 주식회사
KUKDONG HOIST CO., LTD.

DESIGN	SCALE	SHT. NO.	ORDER NO.

DWG. NO. KDC10EB00

192.168.11.51 / 2020-06-11 16:27:42

불법복제 및 배포금지

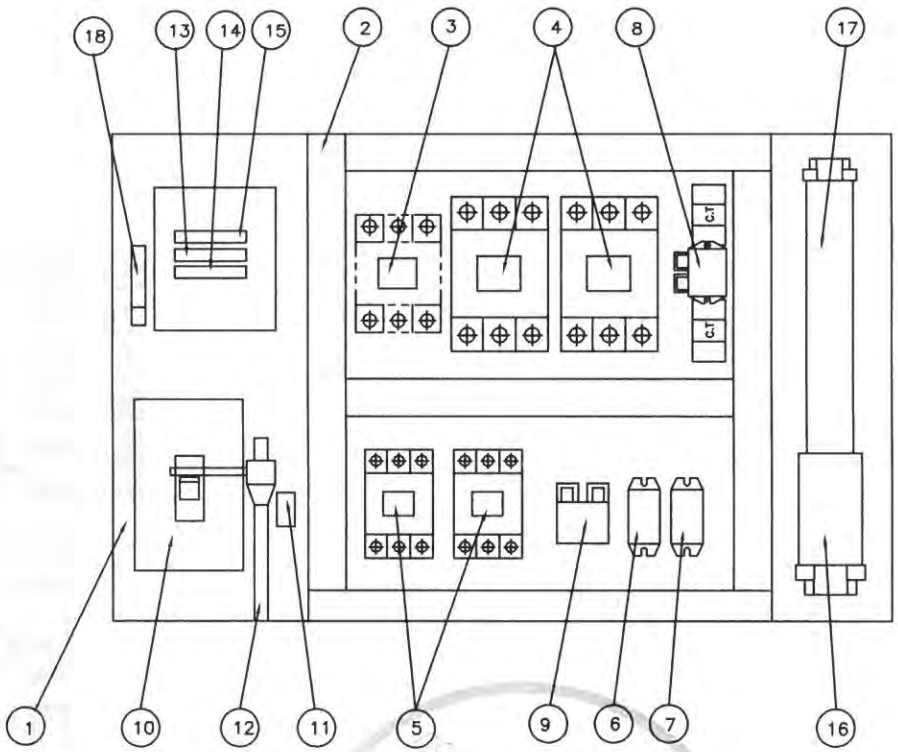

NO	DESCRIPTION	SPECIFICATION	Q'TY	REMARK
1	CHASSIS PLATE		1	아 연 도 금
2	CABLE DUCT	–	1	
3	MAGNET CONTACT	DMC65	1	M1, MAIN MAG.
4	MAGNET CONTACT	MC–100a	2	HOISTING
5	MAGNET CONTACT	DMC22b	2	CREEP
6	SILICON RECTIFIER	SR–60	1	HOISTING
7	SILICON RECTIFIER	SR–30	1	CREEP
8	E.O.C.R	SS–60	1	HOISTING
9	E.O.C.R	SS–30	1	CREEP
10	MCCB100	125AF/75AT	1	LS–2
11	UPPER LIMIT	AC 600V/3A	1	LS–1
12	LIMIT LEVER	SS275	1	
13	FUSE (F11,F12)	3 A	2	
14	FUSE (F13)	5 A	1	
15	TRANSFORMER	220V/110,120V, 200VA	1	
16	TERMINAL BLOCK	60A,25A		
17	TERMINAL BLOCK	15A		
18	EARTH TERMINAL	5tx25x50	1	

N O T E

1. UPPER LIMIT LS–1의 접점 허용 전류 용량. : AC 600V, 3A
2. UPPER LIMIT LS–2의 접점 허용 전류 용량. : NFB 103AF
3. EARTH TERMINAL RESISTANCE : 0.018 Ω
4. POWER SOURCE : AC. 3ø 220V 60HZ

N O T E

1. 전선의 색상은 다음과 같다.
   1) 흑색 : 교류 및 직류 전원선로
   2) 적색 : 교류제어회로
   3) 주황색 : 외부 전원에서 공급되는 연동장치 제어회로
   4) 녹색 또는 녹색과 황색 혼용 : 접지선
   5) 청색 : 직류 제어선로
2. CABLE MATERIAL : KIV OR EQUIVALENT, MIN SIZE : 1.5sq
3. 제어용 전선 : 1.5mm KIV,HIV
4. 제작시 다소 변경될수있음.
5. 외함 개방구조는 다음과 같을것.
   1) 외함 개방시 충전부분이 차단되도록 할것.
   2) 외함 개방후 충전되어있는 부분은 IP2X 이상의 직접 접촉 방호가 되어있을것.

REV	DATE	DESCRIPTION	DRAWN	CHECK	APPRVD
A	27.APR.2020	REDRAWING	K.H.Han	-	-

TITLE: CABLE CONNECTION DIAGRAM

KDC10-D

CUSTOMER

극동호이스트 주식회사
KUKDONG HOIST CO., LTD.

DESIGN	SCALE	SHT. NO.	ORDER NO.

DWG. NO. KDC10D-BA20

192.168.11.51 / 2020-06-11 16:27:42

불법복제 및 배포금지

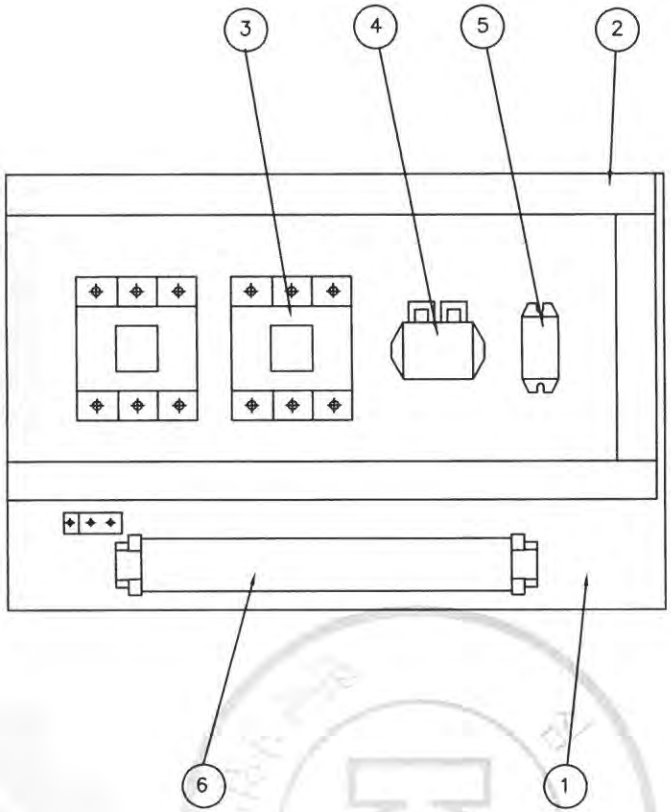

NO	DESCRIPTION	SPEC	Q'TY	REMARK
1	CHASSIS PLATE	–	1	아 연 도 금
2	CABLE DUCT	–	1	
3	MAGNET CONTACTOR	DMC22b	2	TRAVERSING
4	E.O.C.R	SS–05 (30M: SS–30)	1	TRAVERSING
5	SILICON RECTIFIER	SR–30	1	TRAVERSING
6	TERMINAL BLOCK	25A , 15A	1	TRAVERSING

REV	DATE	DESCRIPTION	DRAWN	CHECK	APPRVD
A	27.APR.2020	REDRAWING	K.H.Han	-	-

TITLE
CABLE CONNECTION DIAGRAM
KDC10-D

CUSTOMER

극동호이스트 주식회사
KUKDONG HOIST CO., LTD.

DESIGN	SCALE	SHT. NO.	ORDER NO.

DWG. NO. KDC10D-BA21

192.168.11.51 / 2020-06-11 16:27:42
무단배포금지

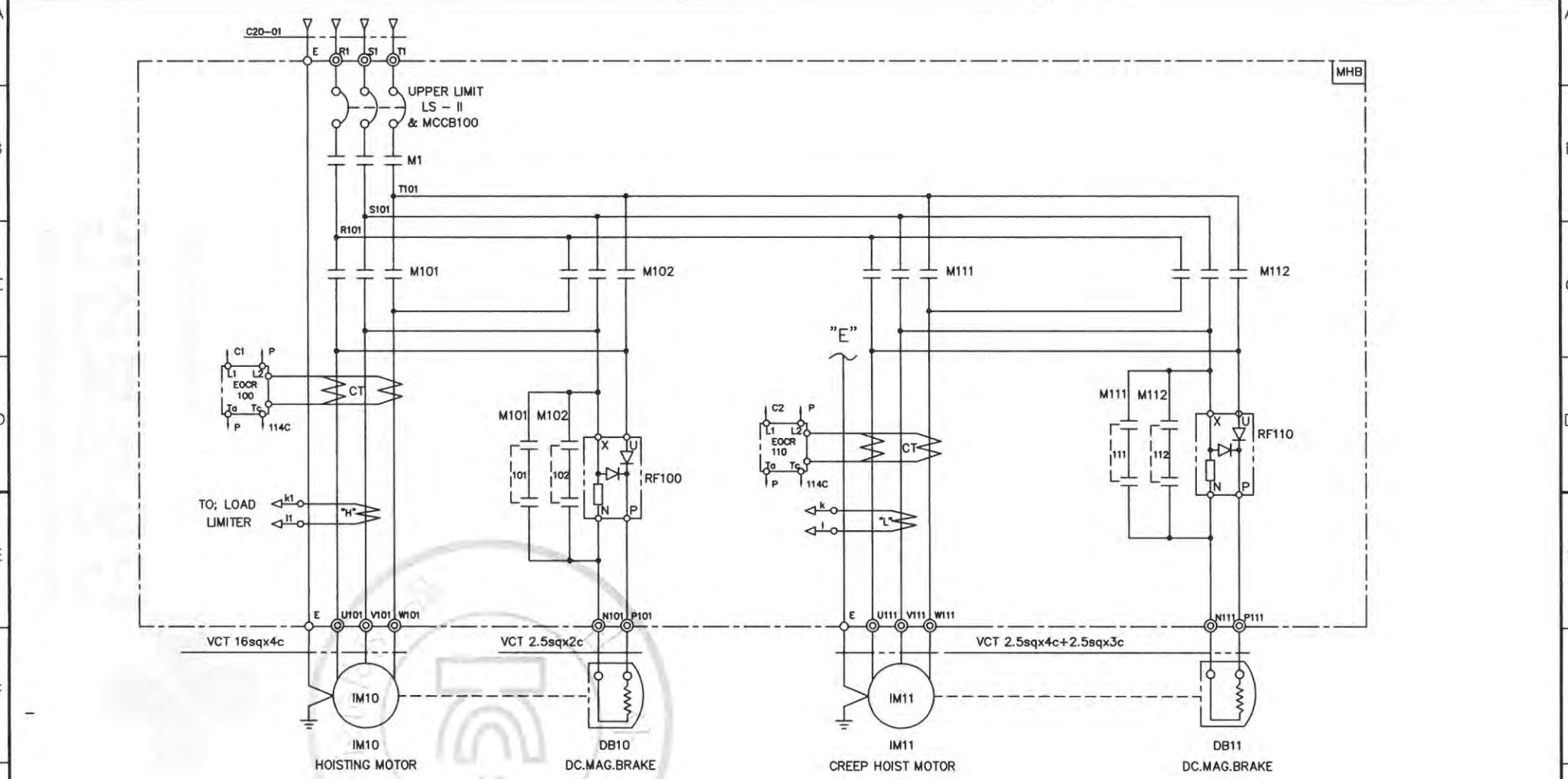

SPECIFICATION / SYMBOLS	HOISTING POWER	HOISTING MOTOR	CREEP MOTOR	DC.MAG' BRAKE	NO FUSE BREAKER	TRANSFORMER	FUSE		MAIN MAGNET	MAGNET CONTACTOR		UPPER LIMIT	ELECTRIC OVER CURRENT RELAY		SILICON RECTIFIER		LOAD LIMITER	CABLE
DESCRIPTION	HOIST	IM 10	IM 11	DB10, 11	LS-II & MCCB100	TR 1	F11,F12	F13	M1	M101,M102	M111,M112	LS-I, LS-II	EOCR100	EOCR110	RF100	RF110	LOAD LIMITER	C20-01
	10TON AC3PH 220V 60Hz	9KWx8P	1.1KWx8P	DC 100V	ABS103c/75AT	220/110V,120V,200VA	3A	5A	DMC65	MC-100a	DMC22b	AC 600V 3A	SS-60	SS-30	SR-60	SR-30	JDL-100	VCT 16sqx4c
SELECTION / MAKER	KUK DONG				LS	SHINHAN	-		DONG-A	LS	DONG-A	KUK DONG	ASECO				JUNGHO	DONGIL

REV	DATE	DESCRIPTION	DRAWN	CHECK	APPRVD
A	27.APR.2020	REDRAWING	K.H.Han	-	-

TITLE
CABLE CONNECTION DIAGRAM
KDC10-D

CUSTOMER

극동호이스트 주식회사
KUKDONG HOIST CO., LTD.

DESIGN	SCALE	SHT. NO.	ORDER NO.

DWG. NO.
KDC10D-E21

192.168.11.51 / 2020-06-11 16:27:42
불법복제 금지 배포금지

POWER CIRCUIT

TRAVERSING MOTION

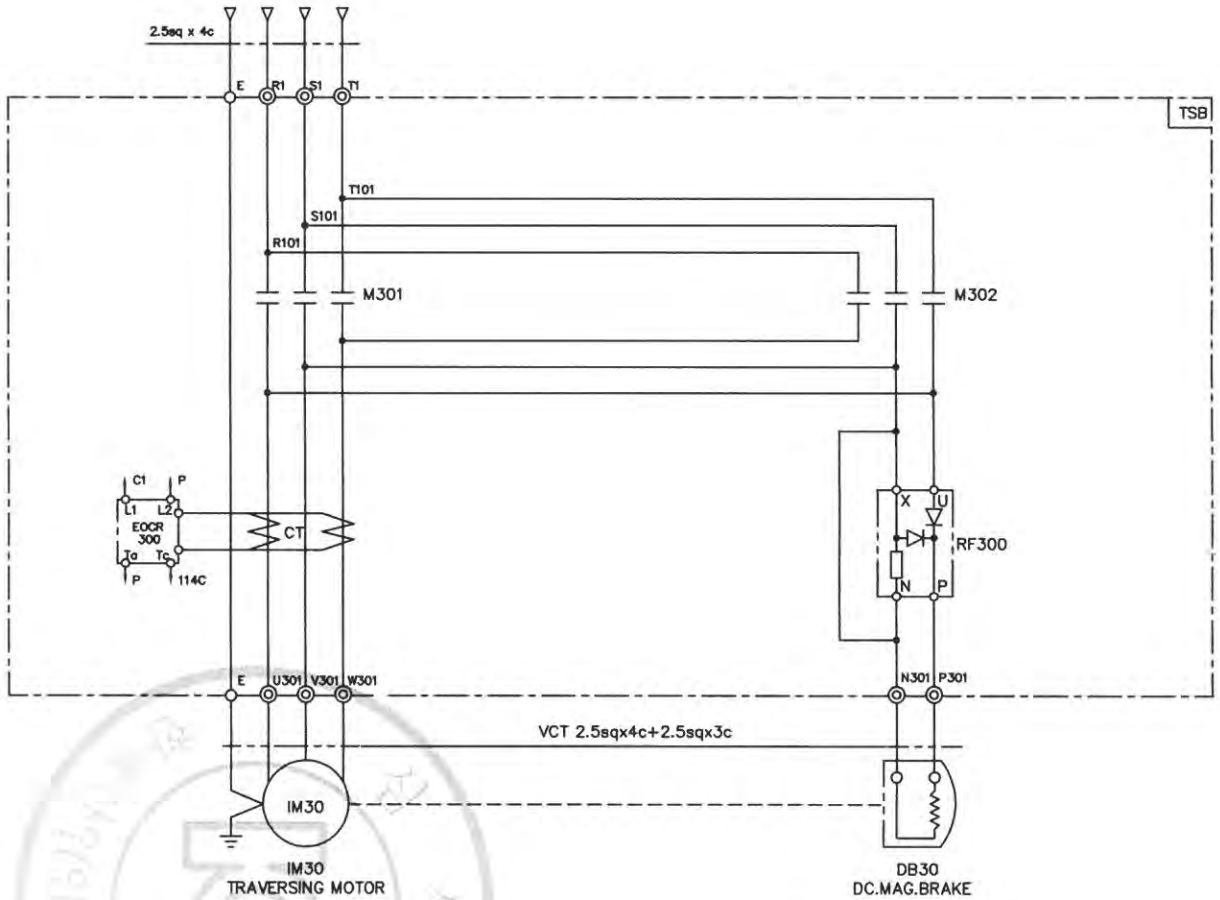

SPECIFICATION / SYMBOLS	TRAVERSING MOTOR	DC MAG' BRAKE	MAGNET CONTACTOR	SILICON RECTIFIER	ELECTRIC OVER CURRENT RELAY	LIMIT SWTCH
DESCRIPTION	IM 30	DB 30	M301 , M302	RF 300	EOCR 300	LS-301 , LS-302
	0.75KW x 4P AC 3PH 220V 60Hz	DC 100V	DMC22b	SR-30	SS-05	KG-L001
	0.5KW x 6P AC 3PH 220V 60Hz	DC 100V	DMC22b	SR-30	SS-05	KG-L001
SELECTION MAKER	KUKDONG		DONG-A	ASECO		KG-AUTO

REV	DATE	DESCRIPTION	DRAWN	CHECK	APPRVD
A	27.APR.2020	REDRAWING	K.H.Han	-	-

TITLE

CABLE CONNECTION DIAGRAM

KDC10-D

CUSTOMER

극동호이스트 주식회사
KUKDONG HOIST CO., LTD.

DESIGN	SCALE	SHT. NO.	ORDER NO.

DWG. NO. KDC10D-E23

192.168.11.51 / 2020-06-11 16:27:42

불법복제 및 배포금지

POWER CIRCUIT

TRAVERSING MOTION

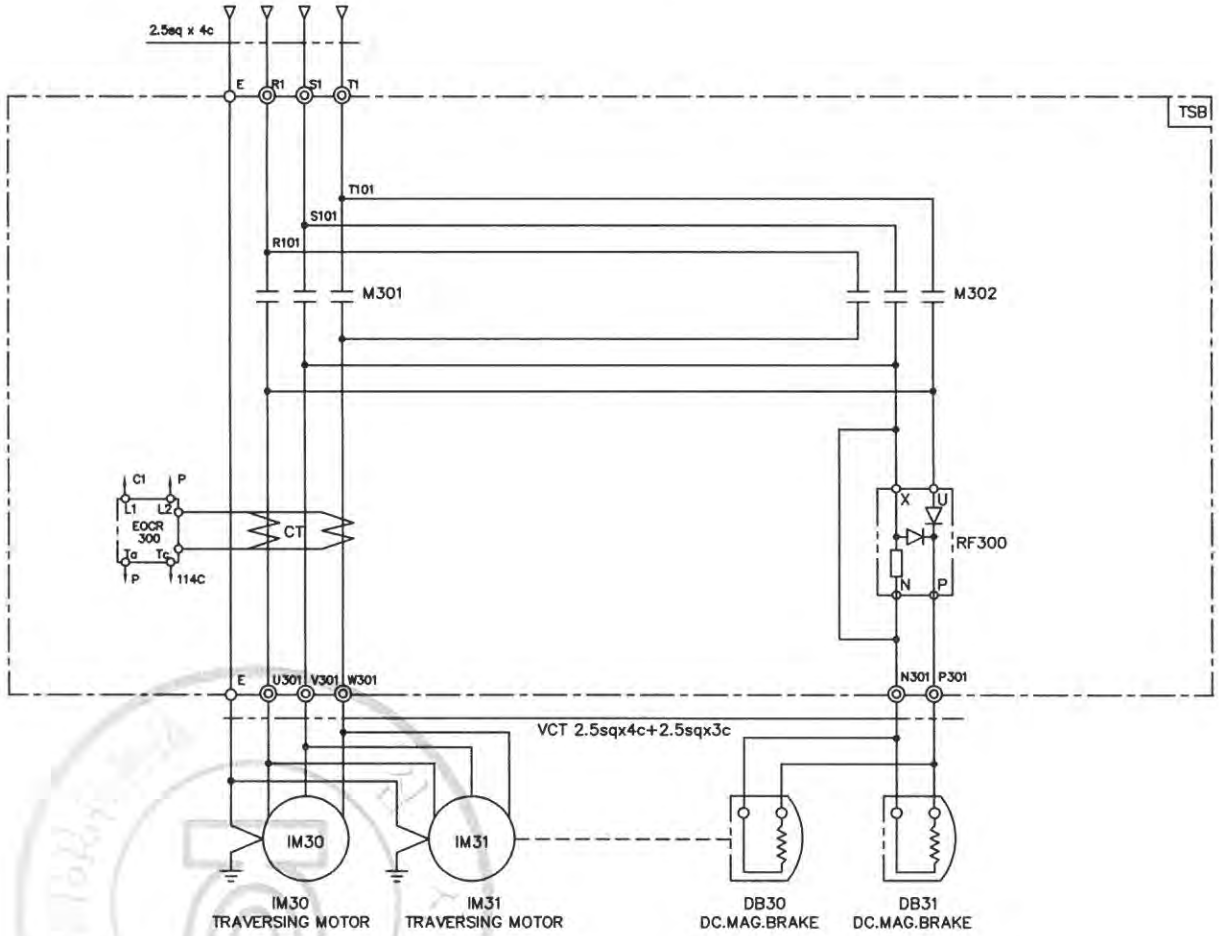

SPECIFICATION / SYMBOLS	TRAVERSING MOTOR	DC MAG' BRAKE	MAGNET CONTACTOR	SILICON RECTIFIER	ELECTRIC OVER CURRENT RELAY	LIMIT SWTCH
DESCRIPTION	IM 30,31	DB 30,31	M301 , M302	RF 300	EOCR 300	LS-301 , LS-302
	0.75KW x 4P AC 3PH 220V 60Hz	DC 100V	DMC22b	SR-30	SS-30	KG-L001
	0.5KW x 6P AC 3PH 220V 60Hz	DC 100V	DMC22b	SR-30	SS-30	KG-L001
SELECTION MAKER	KUKDONG		DONG-A	ASECO		KG-AUTO

REV	DATE	DESCRIPTION	DRAWN	CHECK	APPRVD
A	27.APR.2020	REDRAWING	K.H.Han	-	-

TITLE

CABLE CONNECTION DIAGRAM

KDC10-D

CUSTOMER

극동호이스트 주식회사
KUKDONG HOIST CO., LTD.

DESIGN	SCALE	SHT. NO.	ORDER NO.

DWG. NO. KDC10D-E24

192.168.11.51 / 2020-06-11 16:27:42

불법복제 및 배포금지

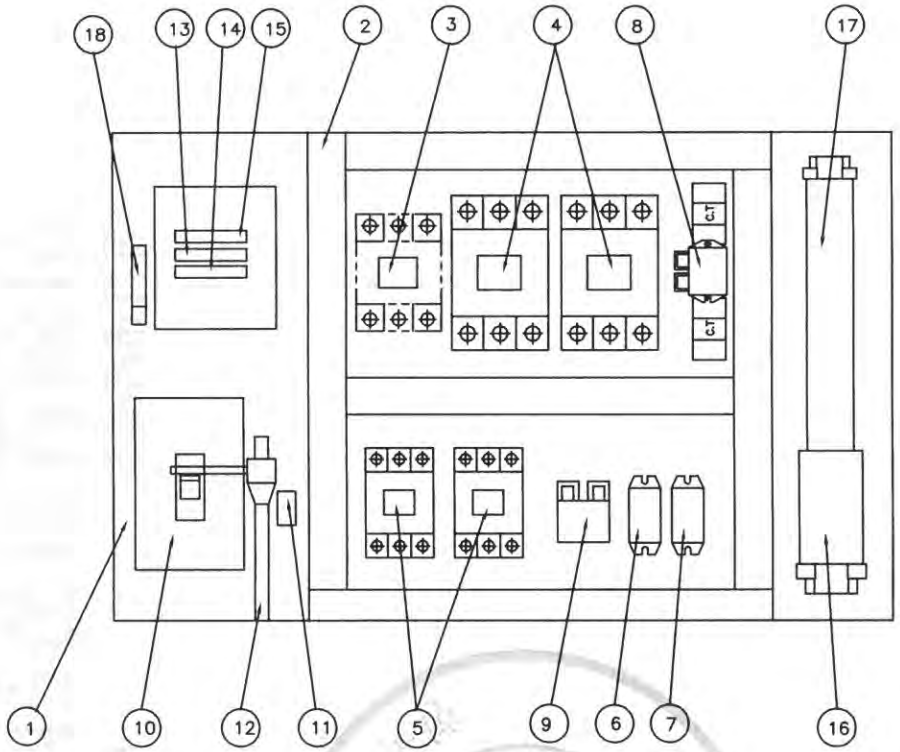

NO	DESCRIPTION	SPECIFICATION	Q'TY	REMARK
1	CHASSIS PLATE		1	아 연 도 금
2	CABLE DUCT	–	1	
3	MAGNET CONTACT	DMC40b	1	M1, MAIN MAG.
4	MAGNET CONTACT	DMC65	2	HOISTING
5	MAGNET CONTACT	DMC22b	2	CREEP
6	SILICON RECTIFIER	SR–60	1	HOISTING
7	SILICON RECTIFIER	SR–30	1	CREEP
8	E.O.C.R	SS–30	1	HOISTING
9	E.O.C.R	SS–05	1	CREEP
10	MCCB100	50AF/50AT	1	LS–2
11	UPPER LIMIT	AC 600V/3A	1	LS–1
12	LIMIT LEVER	SS275	1	
13	FUSE (F11,F12)	2 A	2	
14	FUSE (F13)	5 A	1	
15	TRANSFORMER	380V/110,120V, 200VA	1	
16	TERMINAL BLOCK	60A,25A		
17	TERMINAL BLOCK	15A		
18	EARTH TERMINAL	5tx25x50	1	

NOTE

1. UPPER LIMIT LS–1의 접점 허용 전류 용량. : AC 600V, 3A
2. UPPER LIMIT LS–2의 접점 허용 전류 용량. : NFB 53AF
3. EARTH TERMINAL RESISTANCE : 0.018 Ω
4. POWER SOURCE : AC. 3ø 380V 60HZ

NOTE

1. 전선의 색상은 다음과 같다.
   1) 흑색 : 교류 및 직류 전원선로
   2) 적색 : 교류제어회로
   3) 주황색 : 외부 전원에서 공급되는 연동장치 제어회로
   4) 녹색 또는 녹색과 황색 혼용 : 접지선
   5) 청색 : 직류 제어선로
2. CABLE MATERIAL : KIV OR EQUIVALENT, MIN SIZE : 1.5sq
3. 제어용 전선 : 1.5mm KIV,HIV
4. 제작시 다소 변경될수있음.
5. 외함 개방구조는 다음과 같을것.
   1) 외함 개방시 충전부분이 차단되도록 할것.
   2) 외함 개방후 충전되어있는 부분은 IP2X 이상의 직접 접촉 방호가 되어있을것.

REV	DATE	DESCRIPTION	DRAWN	CHECK	APPRVD
A	27.APR.2020	REDRAWING	K.H.Han	-	-

TITLE: CABLE CONNECTION DIAGRAM
KDC10-D

CUSTOMER

극동호이스트 주식회사
KUKDONG HOIST CO., LTD.

DESIGN	SCALE	SHT. NO.	ORDER NO.

DWG. NO. KDC10D-BA30

192.168.11.51 / 2020-06-11 16:27:42

불법복제 및 배포금지

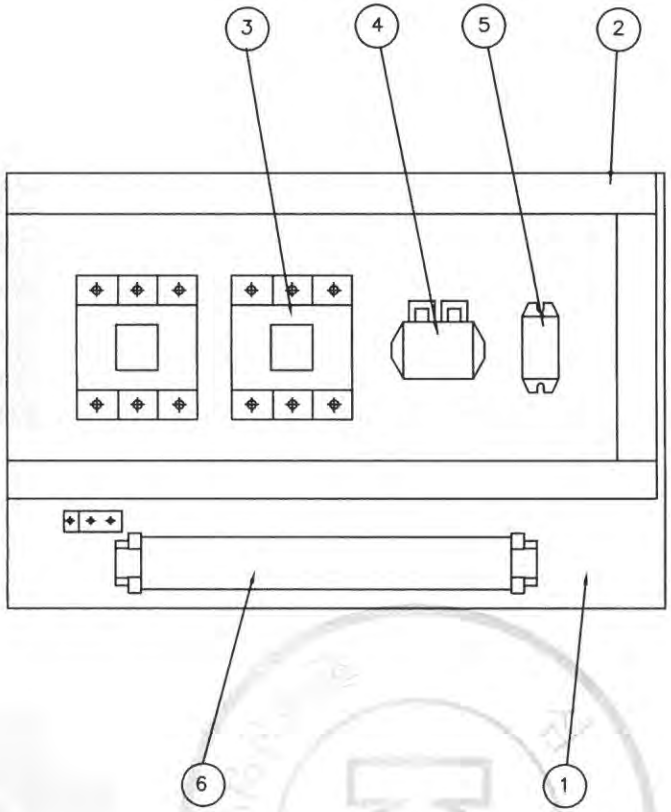

NO	DESCRIPTION	SPEC	Q'TY	REMARK
1	CHASSIS PLATE	–	1	아 연 도 금
2	CABLE DUCT	–	1	
3	MAGNET CONTACTOR	DMC22b	2	TRAVERSING
4	E.O.C.R	SS–05	1	TRAVERSING
5	SILICON RECTIFIER	SR–30	1	TRAVERSING
6	TERMINAL BLOCK	25A , 15A	1	TRAVERSING

REV	DATE	DESCRIPTION	DRAWN	CHECK	APPRVD
A	27.APR.2020	REDRAWING	K.H.Han	-	-

TITLE
CABLE CONNECTION DIAGRAM
KDC10-D

CUSTOMER

극동호이스트 주식회사
KUKDONG HOIST CO., LTD.

DESIGN	SCALE	SHT. NO.	ORDER NO.

DWG. NO. KDC10D-BA31

192.168.11.51 / 2020-06-11 16:27:42
불법복제 금지 배포금지

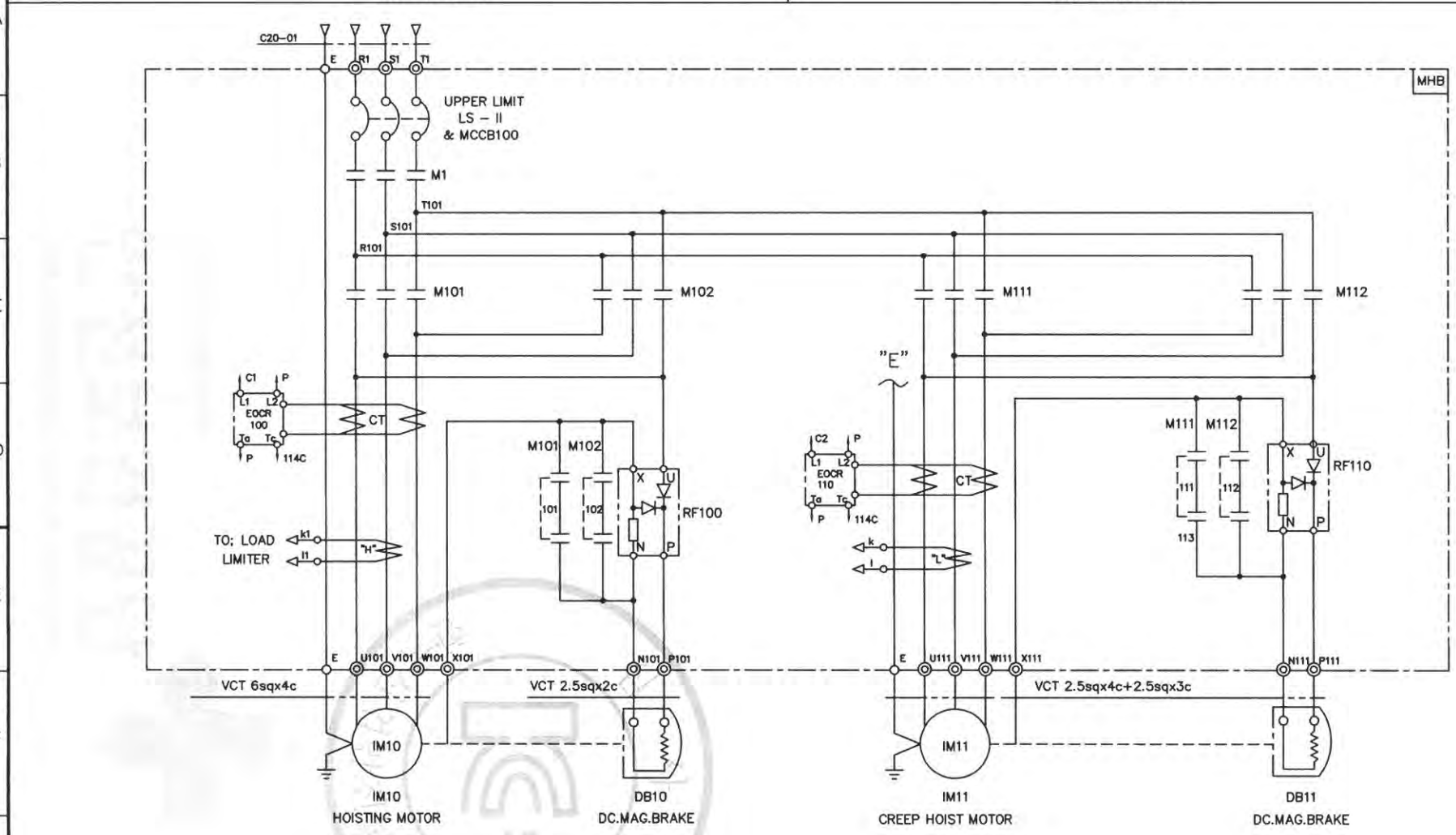

SPECIFICATION / SYMBOLS	HOISTING POWER	HOISTING MOTOR	CREEP MOTOR	DC.MAG' BRAKE	NO FUSE BREAKER	TRANSFORMER	FUSE		MAIN MAGNET	MAGNET CONTACTOR		UPPER LIMIT	ELECTRIC OVER CURRENT RELAY		SILICON RECTIFIER		LOAD LIMITER	CABLE
DESCRIPTION	HOIST	IM 10	IM 11	DB10, 11	LS-II & MCCB100	TR 1	F11,F12	F13	M1	M101,M102	M111,M112	LS-I, LS-II	EOCR100	EOCR110	RF100	RF110	LOAD LIMITER	C20-01
	10TON AC3PH 380V 60Hz	9KWx8P	1.1KWx8P	DC 100V	ABS53c/50AT	380V/110V,120V,220VA	2A	5A	DMC40b	DMC65	DMC22b	AC 600V 3A	SS-30	SS-05	SR-60	SR-30	JDL-100	VCT 10sqx4c
SELECTION / MAKER	KUK DONG				LS	SHINHAN	-		DONG-A			KUK DONG	ASECO				JUNGHO	DONGIL

REV	DATE	DESCRIPTION	DRAWN	CHECK	APPRVD
A	27.APR.2020	REDRAWING	K.H.Han	-	-

TITLE
CABLE CONNECTION DIAGRAM
KDC10-D

CUSTOMER

극동호이스트 주식회사
KUKDONG HOIST CO., LTD.

DESIGN	SCALE	SHT. NO.	ORDER NO.

DWG. NO. KDC10D-E31

192.168.11.51 / 2020-06-11 16:27:42
불법복제 및 배포금지

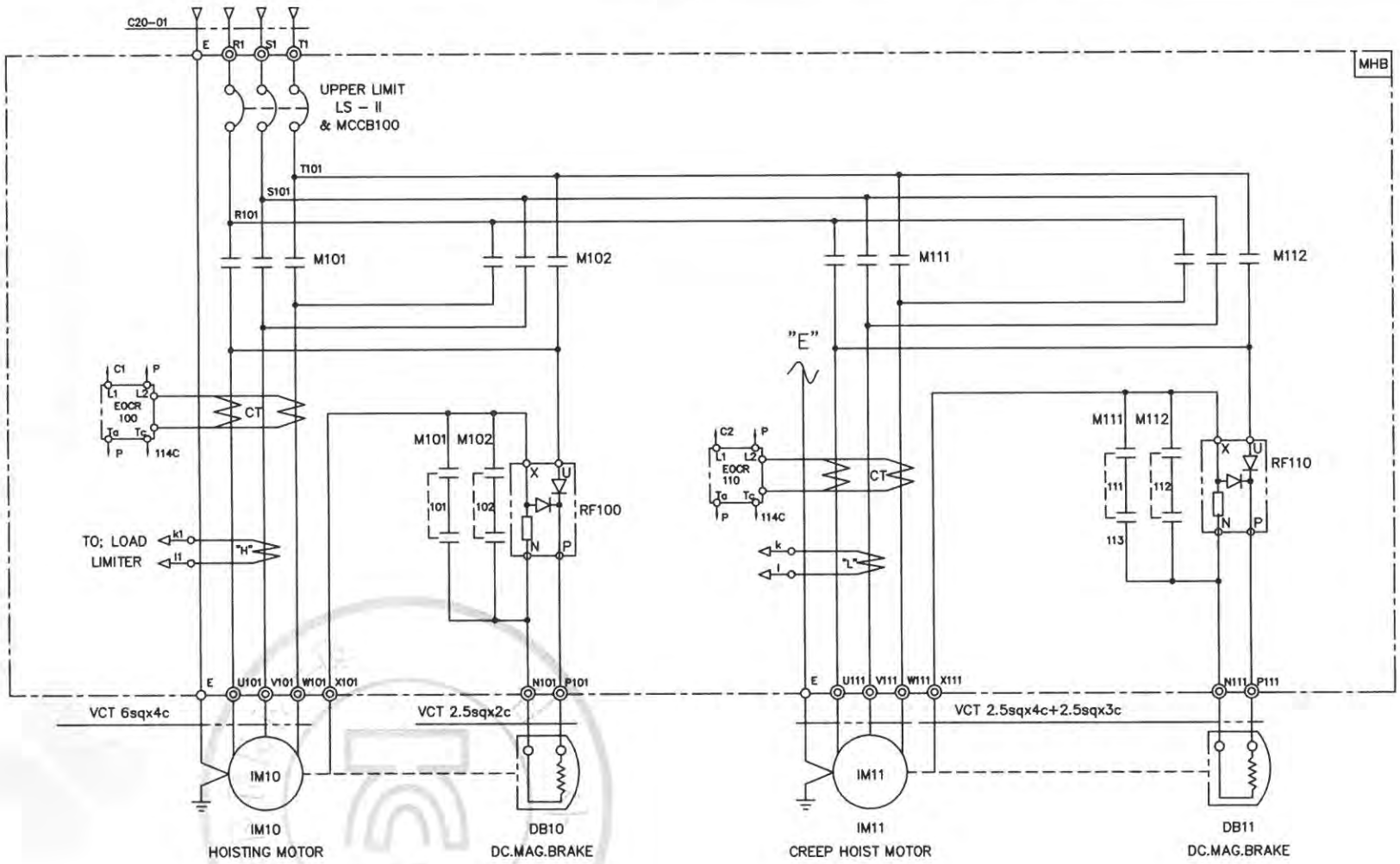

SPECIFICATION / SYMBOLS / DESCRIPTION	HOISTING POWER	HOISTING MOTOR	CREEP MOTOR	DC.MAG BRAKE	NO FUSE BREAKER	TRANSFORMER	FUSE		MAGNET CONTACTOR		UPPER LIMIT	ELECTRIC OVER CURRENT RELAY		SILICON RECTIFIER		LOAD LIMITER	CABLE
	HOIST	IM 10	IM 11	DB10, 11	LS–II & MCCB100	TR 1	F11,F12	F13	M101,M102	M111,M112	LS–I, LS–II	EOCR100	EOCR110	RF100	RF110	LOAD LIMITER	C20–01
	10TON AC3PH 380V 60Hz	9KWx8P	1.1KWx8P	DC 100V	ABS53c/50AT	380V/110V,120V,220VA	2A	5A	DMC65	DMC22b	AC 600V 3A	SS–30	SS–05	SR–60	SR–30	JDL–100	VCT 10sqx4c
SELECTION / MAKER	KUK DONG				LS	SHINHAN	–		DONG–A		KUK DONG	ASECO				JUNGHO	DONGIL

REV	DATE	DESCRIPTION	DRAWN	CHECK	APPRVD
A	27.APR.2020	REDRAWING	K.H.Han	-	-

TITLE
CABLE CONNECTION DIAGRAM
KDC10-D

CUSTOMER

극동호이스트 주식회사
KUKDONG HOIST CO., LTD.

DESIGN	SCALE	SHT. NO.	ORDER NO.

DWG. NO. KDC10D-E32

192.168.11.5 / 2020-06-11 16:27:42
본 도면은 극동호이스트 자료입니다

POWER CIRCUIT

HOISTING MOTION | CREEP HOIST MOTION

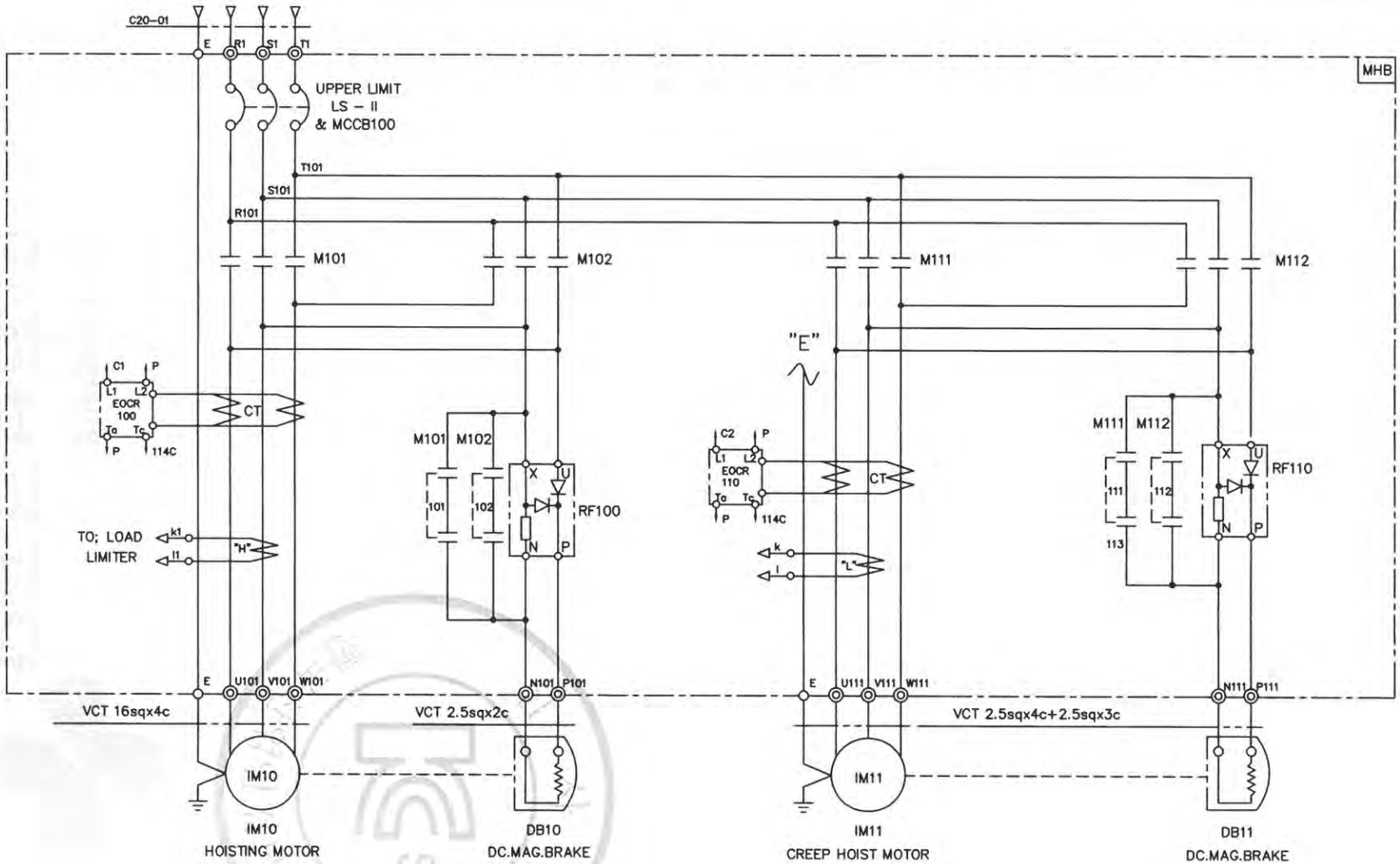

SPECIFICATION / SYMBOLS	HOISTING POWER	HOISTING MOTOR	CREEP MOTOR	DC.MAG' BRAKE	NO FUSE BREAKER	TRANSFORMER	FUSE		MAGNET CONTACTOR		UPPER LIMIT	ELECTRIC OVER CURRENT RELAY		SILICON RECTIFIER		LOAD LIMITER	CABLE
DESCRIPTION	HOIST	IM 10	IM 11	DB10, 11	LS-II & MCCB100	TR 1	F11,F12	F13	M101,M102	M111,M112	LS-I, LS-II	EOCR100	EOCR110	RF100	RF110	LOAD LIMITER	C20-01
	10TON AC3PH 220V 60Hz	9KWx8P	1.1KWx8P	DC 100V	ABS103c/75AT	220/110V,120V,200VA	3A	5A	MC-100a	DMC22b	AC 600V 3A	SS-60	SS-30	SR-60	SR-30	JDL-100	VCT 16sqx4c
SELECTION / MAKER	KUK DONG				LS	SHINHAN	-		LS	DONG-A	KUK DONG	ASECO				JUNGHO	DONGIL

REV	DATE	DESCRIPTION	DRAWN	CHECK	APPRVD
A	27.APR.2020	REDRAWING	K.H.Han	-	-

TITLE: CABLE CONNECTION DIAGRAM

KDC10-D

CUSTOMER

극동호이스트 주식회사
KUKDONG HOIST CO., LTD.

DESIGN	SCALE	SHT. NO.	ORDER NO.

DWG. NO. KDC10D-E22

192.168.11.51 / 2020.06.11 16:27:42 PM

복사 및 배포 금지

POWER CIRCUIT

TRAVERSING MOTION

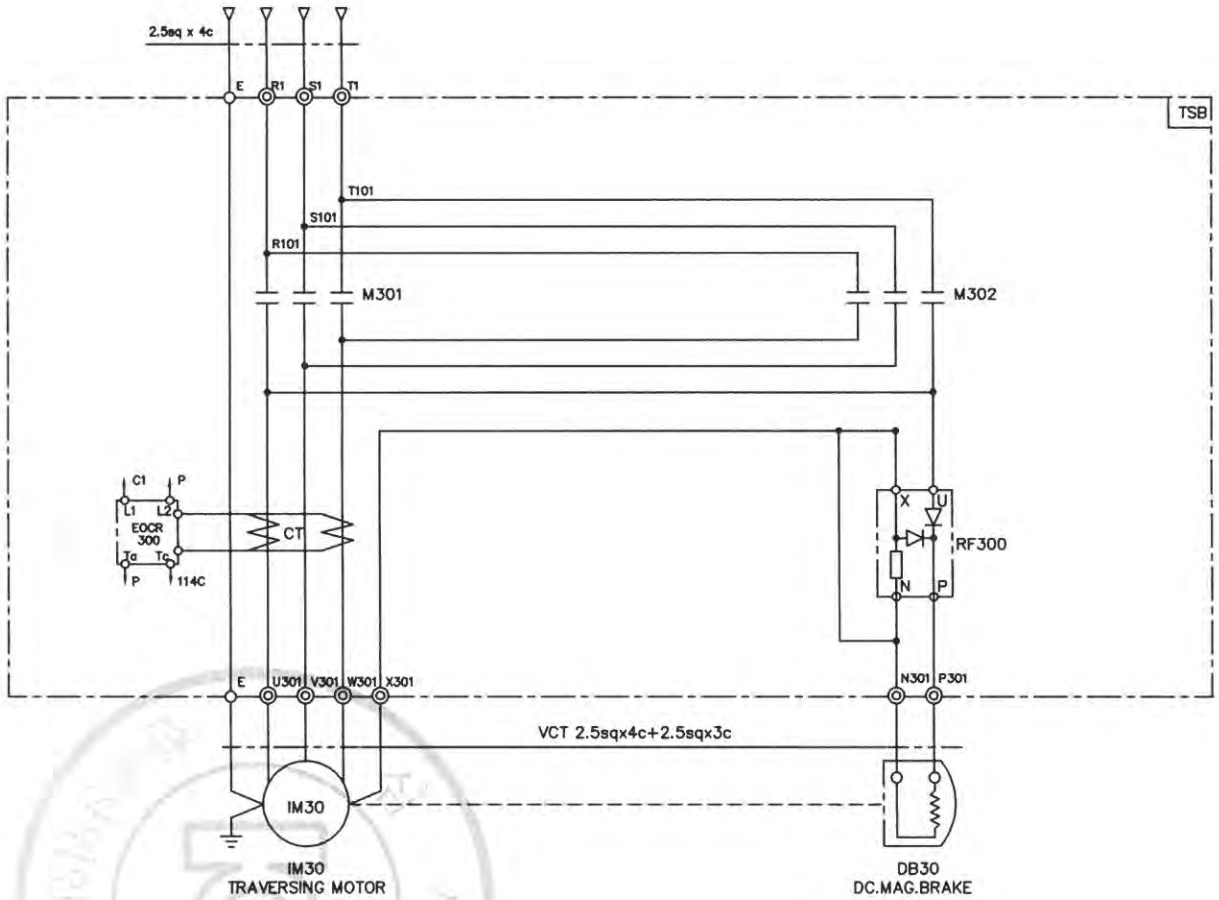

SPECIFICATION / SYMBOLS	TRAVERSING MOTOR	DC MAG' BRAKE	MAGNET CONTACTOR	SILICON RECTIFIER	ELECTRIC OVER CURRENT RELAY	LIMIT SWTCH
DESCRIPTION	IM 30	DB 30	M301 , M302	RF 300	EOCR 300	LS-301 , LS-302
	0.75KW x 4P AC 3PH 380V 60Hz	DC 100V	DMC22b	SR-30	SS-05	KG-L001
	0.5KW x 6P AC 3PH 380V 60Hz	DC 100V	DMC22b	SR-30	SS-05	KG-L001
SELECTION / MAKER	KUKDONG		DONG-A	ASECO		KG-AUTO

REV	DATE	DESCRIPTION	DRAWN	CHECK	APPRVD
A	27.APR.2020	REDRAWING	K.H.Han	-	-

TITLE

CABLE CONNECTION DIAGRAM

KDC10-D

CUSTOMER

극동호이스트 주식회사
KUKDONG HOIST CO., LTD.

DESIGN	SCALE	SHT. NO.	ORDER NO.

DWG. NO. KDC10D-E33

192.168.11.51 / 2020-06-11 16:27:42

불법복제 및 배포금지

POWER CIRCUIT

TRAVERSING MOTION

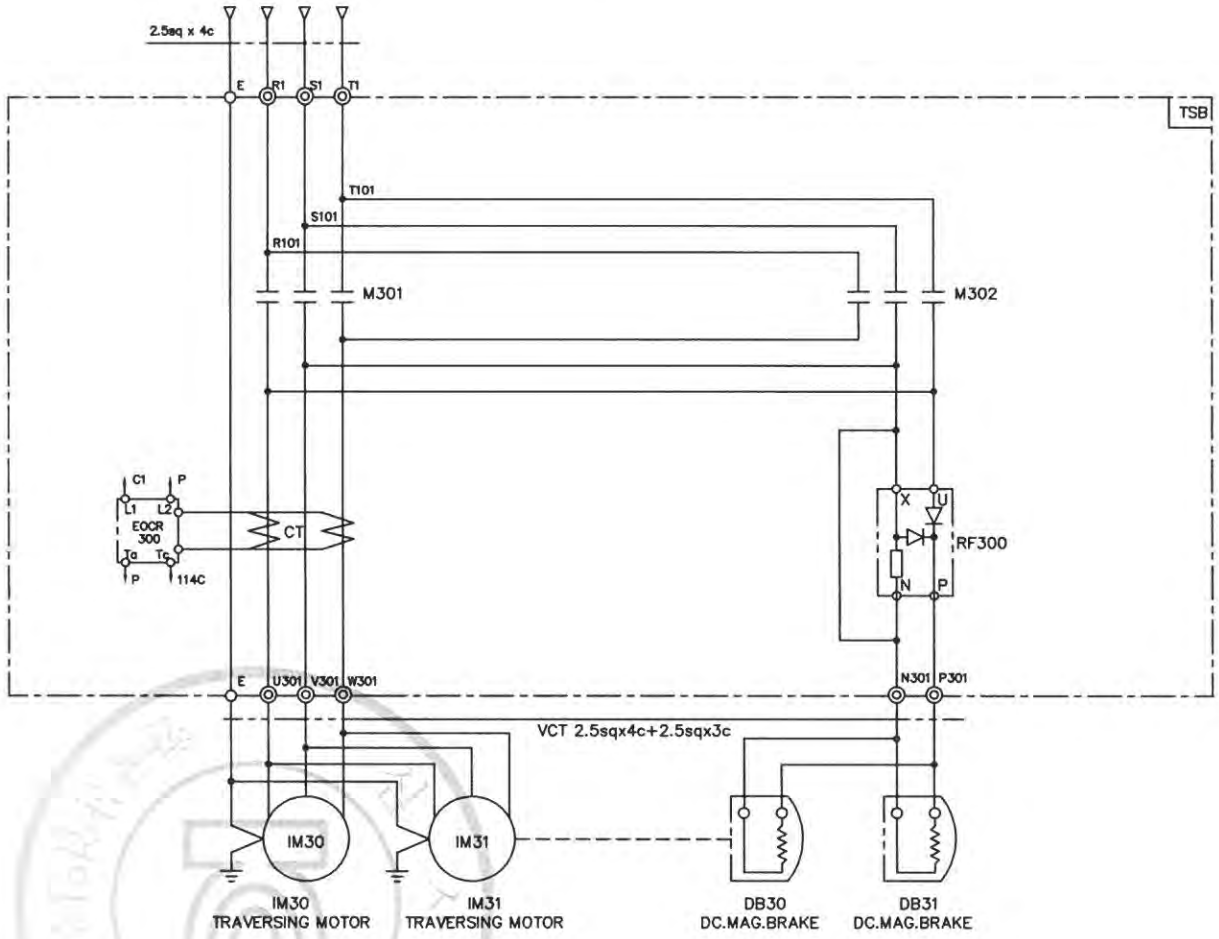

SPECIFICATION / SYMBOLS	TRAVERSING MOTOR	DC MAG' BRAKE	MAGNET CONTACTOR	SILICON RECTIFIER	ELECTRIC OVER CURRENT RELAY	LIMIT SWTCH
DESCRIPTION	IM 30,31	DB 30,31	M301 , M302	RF 300	EOCR 300	LS-301 , LS-302
	0.75KW x 4P AC 3PH 380V 60Hz	DC 100V	DMC22b	SR-30	SS-05	KG-L001
	0.5KW x 6P AC 3PH 380V 60Hz	DC 100V	DMC22b	SR-30	SS-05	KG-L001
SELECTION MAKER	KUKDONG		DONG-A	ASECO		KG-AUTO

REV	DATE	DESCRIPTION	DRAWN	CHECK	APPRVD
A	27.APR.2020	REDRAWING	K.H.Han	-	-

TITLE

CABLE CONNECTION DIAGRAM

KDC10-D

CUSTOMER

극동호이스트 주식회사
KUKDONG HOIST CO., LTD.

DESIGN	SCALE	SHT. NO.	ORDER NO.

DWG. NO. KDC10D-E34

192.168.115.51 / 2020-06-11 16:27:42

불법복제 및 배포금지

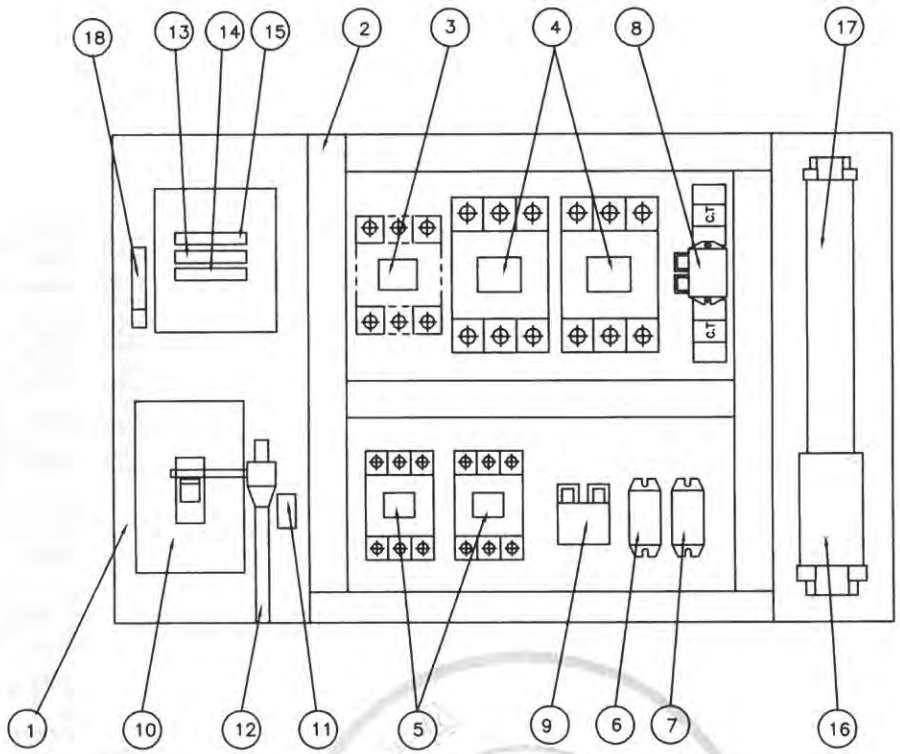

NO	DESCRIPTION	SPECIFICATION	Q'TY	REMARK
1	CHASSIS PLATE		1	아 연 도 금
2	CABLE DUCT	–	1	
3	MAGNET CONTACT	DMC40b	1	M1, MAIN MAG.
4	MAGNET CONTACT	DMC48b	2	HOISTING
5	MAGNET CONTACT	DMC22b	2	CREEP
6	SILICON RECTIFIER	SR–60	1	HOISTING
7	SILICON RECTIFIER	SR–30	1	CREEP
8	E.O.C.R	SS–30	1	HOISTING
9	E.O.C.R	SS–05	1	CREEP
10	MCCB100	50AF/40AT	1	LS–2
11	UPPER LIMIT	AC 600V/3A	1	LS–1
12	LIMIT LEVER	SS275	1	
13	FUSE (F11,F12)	2 A	2	
14	FUSE (F13)	5 A	1	
15	TRANSFORMER	440V/110V,120V, 200VA	1	
16	TERMINAL BLOCK	60A,25A		
17	TERMINAL BLOCK	15A		
18	EARTH TERMINAL	5tx25x50	1	

NOTE

1. UPPER LIMIT LS–1의 접점 허용 전류 용량. : AC 600V, 3A
2. UPPER LIMIT LS–2의 접점 허용 전류 용량. : NFB 53AF
3. EARTH TERMINAL RESISTANCE : 0.018 Ω
4. POWER SOURCE : AC. 3ø 440V 60HZ

NOTE

1. 전선의 색상은 다음과 같다.
   1) 흑색 : 고류 및 직류 전원선로
   2) 적색 : 고류제어회로
   3) 주황색 : 외부 전원에서 공급되는 연동장치 제어회로
   4) 녹색 또는 녹색과 황색 혼용 : 접지선
   5) 청색 : 직류 제어선로
2. CABLE MATERIAL : KIV OR EQUIVALENT, MIN SIZE : 1.5sq
3. 제어용 전선 : 1.5mm KIV,HIV
4. 제작시 다소 변경될수있음.
5. 외함 개방구조는 다음과 같을것.
   1) 외함 개방시 충전부분이 차단되도록 할것.
   2) 외함 개방후 충전되어있는 부분은 IP2X 이상의 직접 접촉 방호가 되어있을것.

REV	DATE	DESCRIPTION	DRAWN	CHECK	APPRVD
A	27.APR.2020	REDRAWING	K.H.Han	-	-

TITLE: CABLE CONNECTION DIAGRAM
KDC10-D

CUSTOMER

극동호이스트 주식회사
KUKDONG HOIST CO., LTD.

DESIGN	SCALE	SHT. NO.	ORDER NO.

DWG. NO. KDC10D-BA40

192.168.115.51 / 2020-06-11 16:27:42

불법복제 및 배포금지

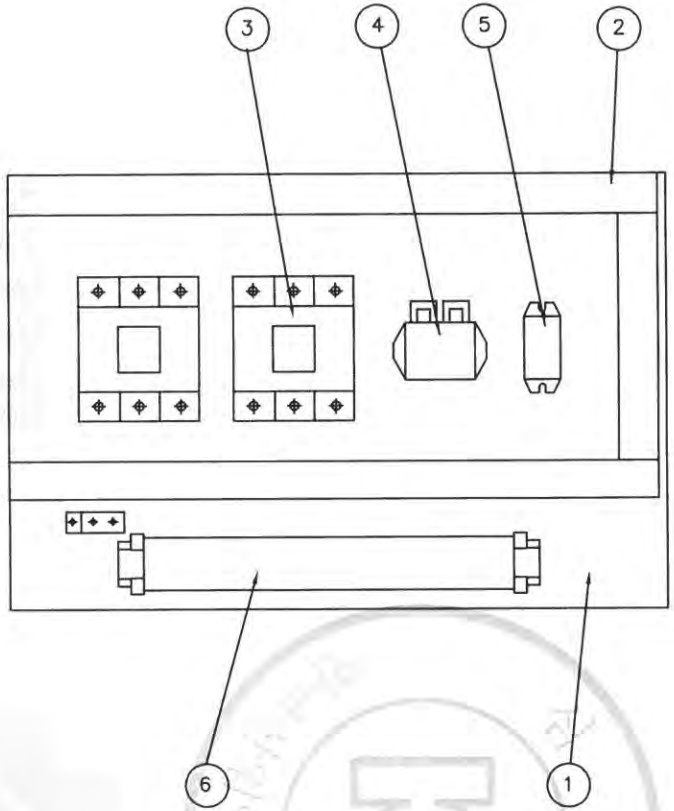

NO	DESCRIPTION	SPEC	Q'TY	REMARK
1	CHASSIS PLATE	–	1	아 연 도 금
2	CABLE DUCT	–	1	
3	MAGNET CONTACTOR	DMC22b	2	TRAVERSING
4	E.O.C.R	SS–05	1	TRAVERSING
5	SILICON RECTIFIER	SR–30	1	TRAVERSING
6	TERMINAL BLOCK	25A , 15A	1	TRAVERSING

REV	DATE	DESCRIPTION	DRAWN	CHECK	APPRVD
A	27.APR.2020	REDRAWING	K.H.Han	-	-

TITLE
CABLE CONNECTION DIAGRAM
KDC10-D

CUSTOMER

극동호이스트 주식회사
KUKDONG HOIST CO., LTD.

DESIGN	SCALE	SHT. NO.	ORDER NO.

DWG. NO. KDC10D-BA41

불법복제 및 배포금지
192.168.11.51 / 2020-06-11 16:27:42

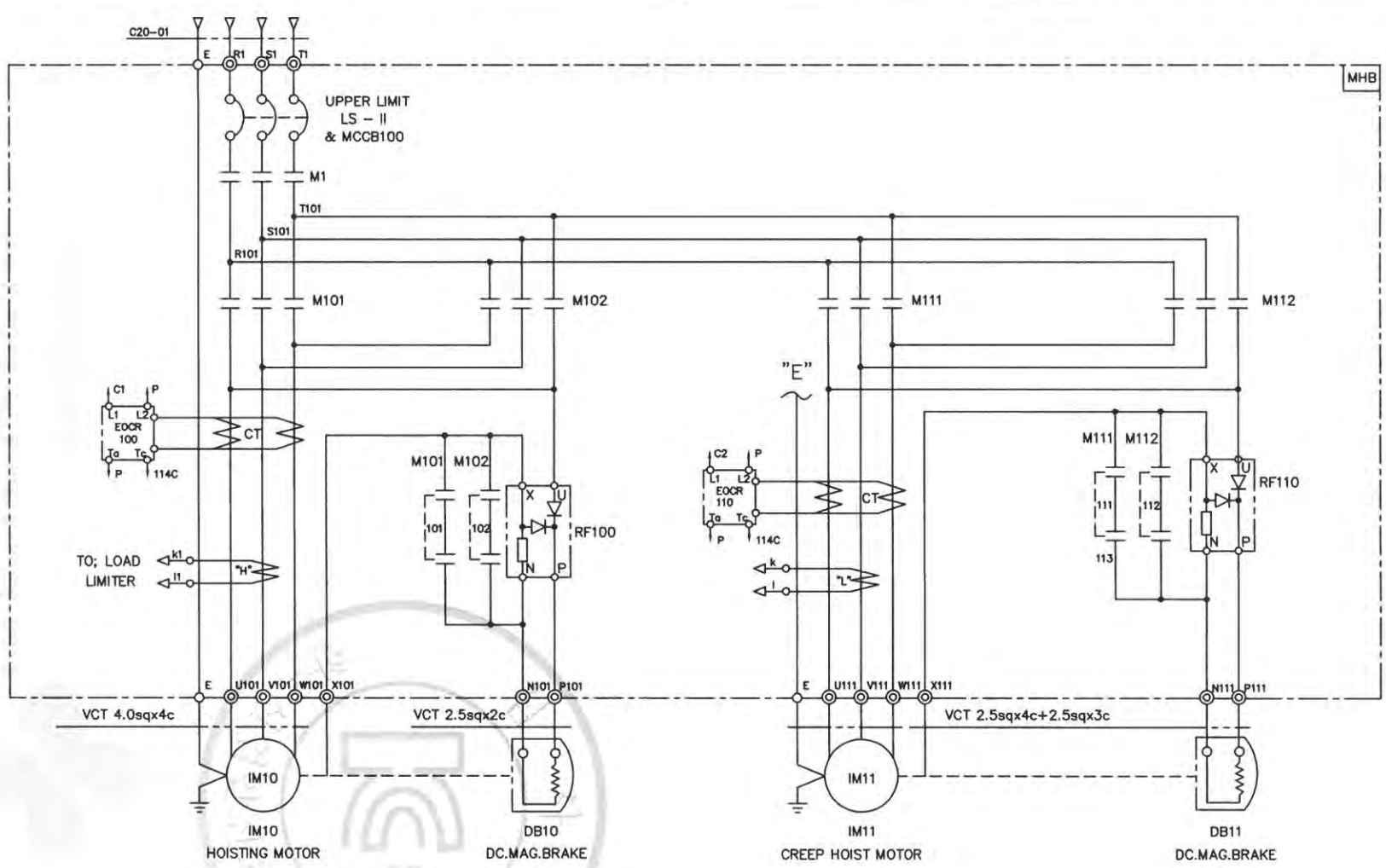

SPECIFICATION / SYMBOLS	HOISTING POWER	HOISTING MOTOR	CREEP MOTOR	DC.MAG' BRAKE	NO FUSE BREAKER	TRANSFORMER	FUSE		MAIN MAGNET	MAGNET CONTACTOR		UPPER LIMIT	ELECTRIC OVER CURRENT RELAY		SILICON RECTIFIER		LOAD LIMITER	CABLE
DESCRIPTION	HOIST	IM 10	IM 11	DB10, 11	LS-II & MCCB100	TR 1	F11,F12	F13	M1	M101,M102	M111,M112	LS-I, LS-II	EOCR100	EOCR110	RF100	RF110	LOAD LIMITER	C20-01
	10TON AC3PH 440V 60Hz	9KWx8P	1.1KWx8P	DC 100V	ABS53c/40AT	440V/110V,120V,200VA	2A	5A	DMC40b	DMC48b	DMC22b	AC 600V 3A	SS-30	SS-05	SR-60	SR-30	JDL-100	VCT 6.0sqx4c
SELECTION / MAKER	KUK DONG				LS	SHINHAN	-		DONG-A	DONG-A		KUK DONG	ASECO				JUNGHO	DONGIL

REV	DATE	DESCRIPTION	DRAWN	CHECK	APPRVD
A	27.APR.2020	REDRAWING	K.H.Han	-	-

TITLE
CABLE CONNECTION DIAGRAM
KDC10-D

CUSTOMER

극동호이스트 주식회사
KUKDONG HOIST CO., LTD.

DESIGN	SCALE	SHT. NO.	ORDER NO.

DWG. NO. KDC10D-E41

192.168.11.51 / 2020-06-11 16:27:42
불법복제 금지 배포금지

POWER CIRCUIT

HOISTING MOTION | CREEP HOIST MOTION

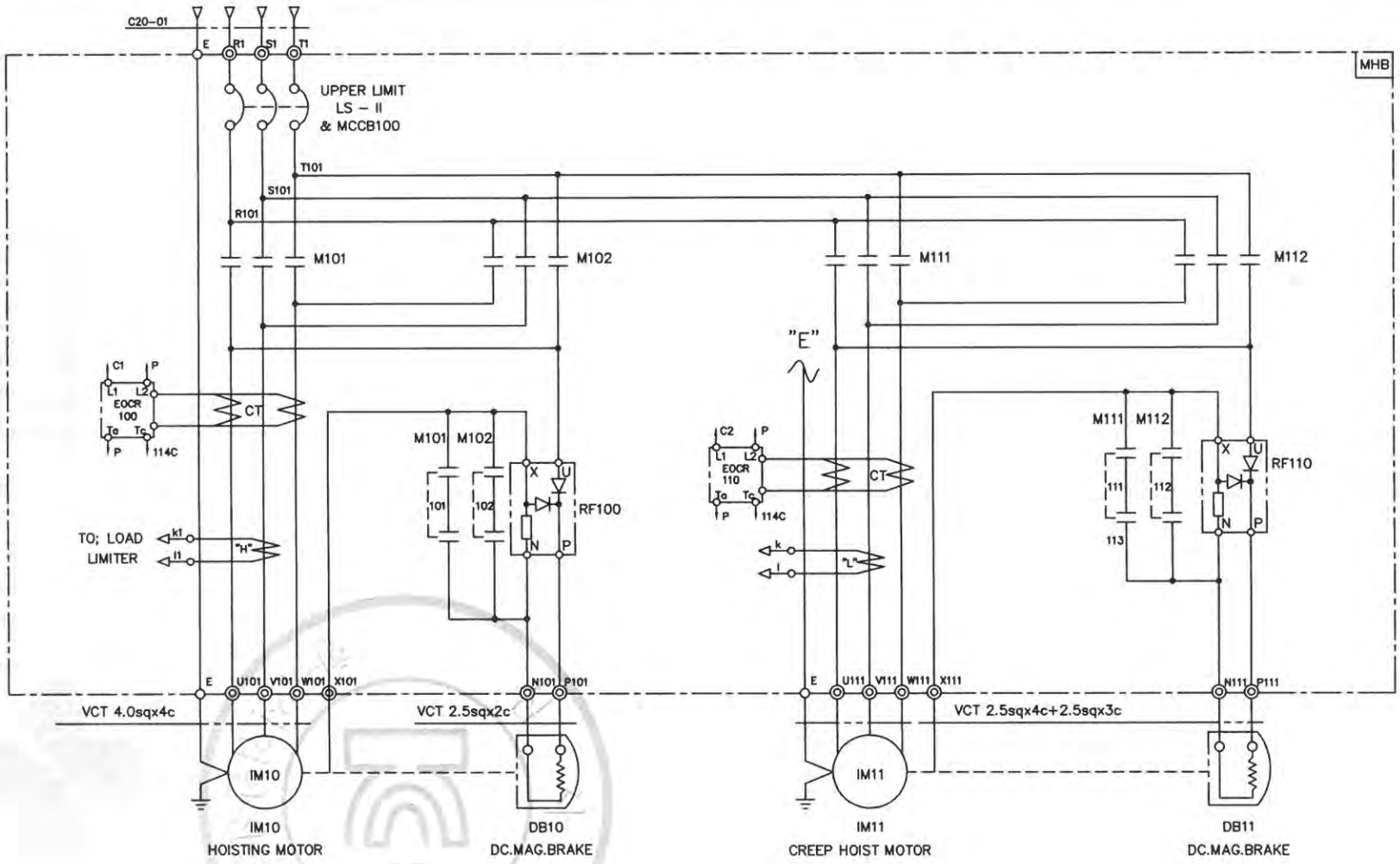

SPECIFICATION / SYMBOLS	HOISTING POWER	HOISTING MOTOR	CREEP MOTOR	DC.MAG' BRAKE	NO FUSE BREAKER	TRANSFORMER	FUSE		MAGNET CONTACTOR		UPPER LIMIT	ELECTRIC OVER CURRENT RELAY		SILICON RECTIFIER		LOAD LIMITER	CABLE
DESCRIPTION	HOIST	IM 10	IM 11	DB10, 11	LS-II & MCCB100	TR 1	F11,F12	F13	M101,M102	M111,M112	LS-I, LS-II	EOCR100	EOCR110	RF100	RF110	LOAD LIMITER	C20-01
	10TON AC3PH 440V 60Hz	9KWx8P	1.1KWx8P	DC 100V	ABS53c/40AT	440V/110V,120V,200VA	2A	5A	DMC48b	DMC22b	AC 600V 3A	SS-30	SS-05	SR-60	SR-30	JDL-100	VCT 6.0sqx4c
SELECTION / MAKER	KUK DONG				LS	SHINHAN	-		DONG-A		KUK DONG	ASECO				JUNGHO	DONGIL

REV	DATE	DESCRIPTION	DRAWN	CHECK	APPRVD
A	27.APR.2020	REDRAWING	K.H.Han	-	-

TITLE: CABLE CONNECTION DIAGRAM

KDC10-D

CUSTOMER

극동호이스트 주식회사
KUKDONG HOIST CO., LTD.

DESIGN	SCALE	SHT. NO.	ORDER NO.

DWG. NO. KDC10D-E42

192.168.11.51 / 2020-06-11 16:27:42

불법복제 및 배포금지

POWER CIRCUIT

TRAVERSING MOTION

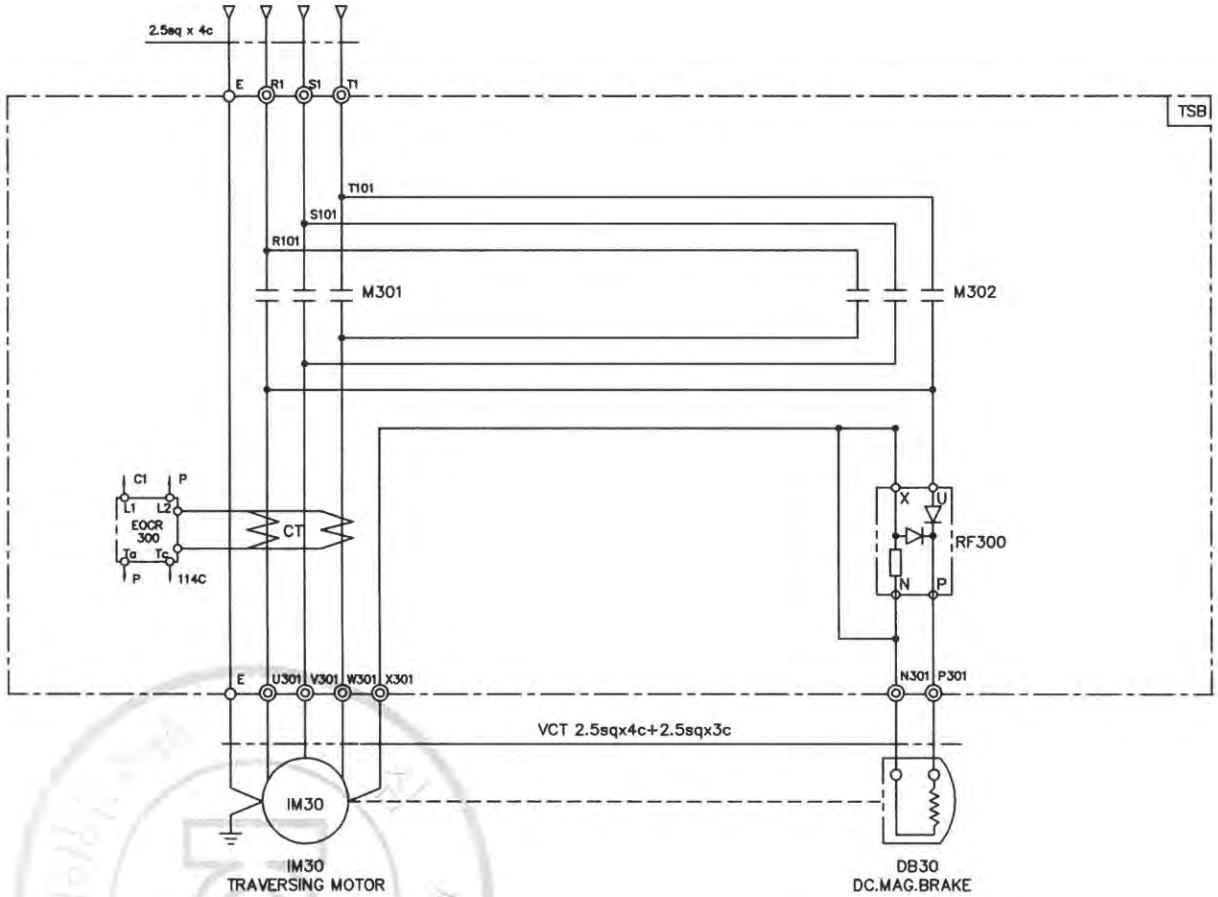

SPECIFICATION / SYMBOLS	TRAVERSING MOTOR	DC MAG' BRAKE	MAGNET CONTACTOR	SILICON RECTIFIER	ELECTRIC OVER CURRENT RELAY	LIMIT SWTCH
DESCRIPTION	IM 30	DB 30	M301 , M302	RF 300	EOCR 300	LS-301 , LS-302
	0.75KW x 4P AC 3PH 440V 60Hz	DC 100V	DMC22Cb	SR-30	SS-05	KG-L001
	0.5KW x 6P AC 3PH 440V 60Hz	DC 100V	DMC22Cb	SR-30	SS-05	KG-L001
SELECTION MAKER	KUKDONG		DONG-A	ASECO		

REV	DATE	DESCRIPTION	DRAWN	CHECK	APPRVD
A	27.APR.2020	REDRAWING	K.H.Han	-	-

TITLE

CABLE CONNECTION DIAGRAM

KDC10-D

CUSTOMER

극동호이스트 주식회사
KUKDONG HOIST CO., LTD.

DESIGN	SCALE	SHT. NO.	ORDER NO.

DWG. NO. KDC10D-E43

192.168.11.51 / 2020-06-11 16:27:42

불법복제 및 배포금지

POWER CIRCUIT

TRAVERSING MOTION

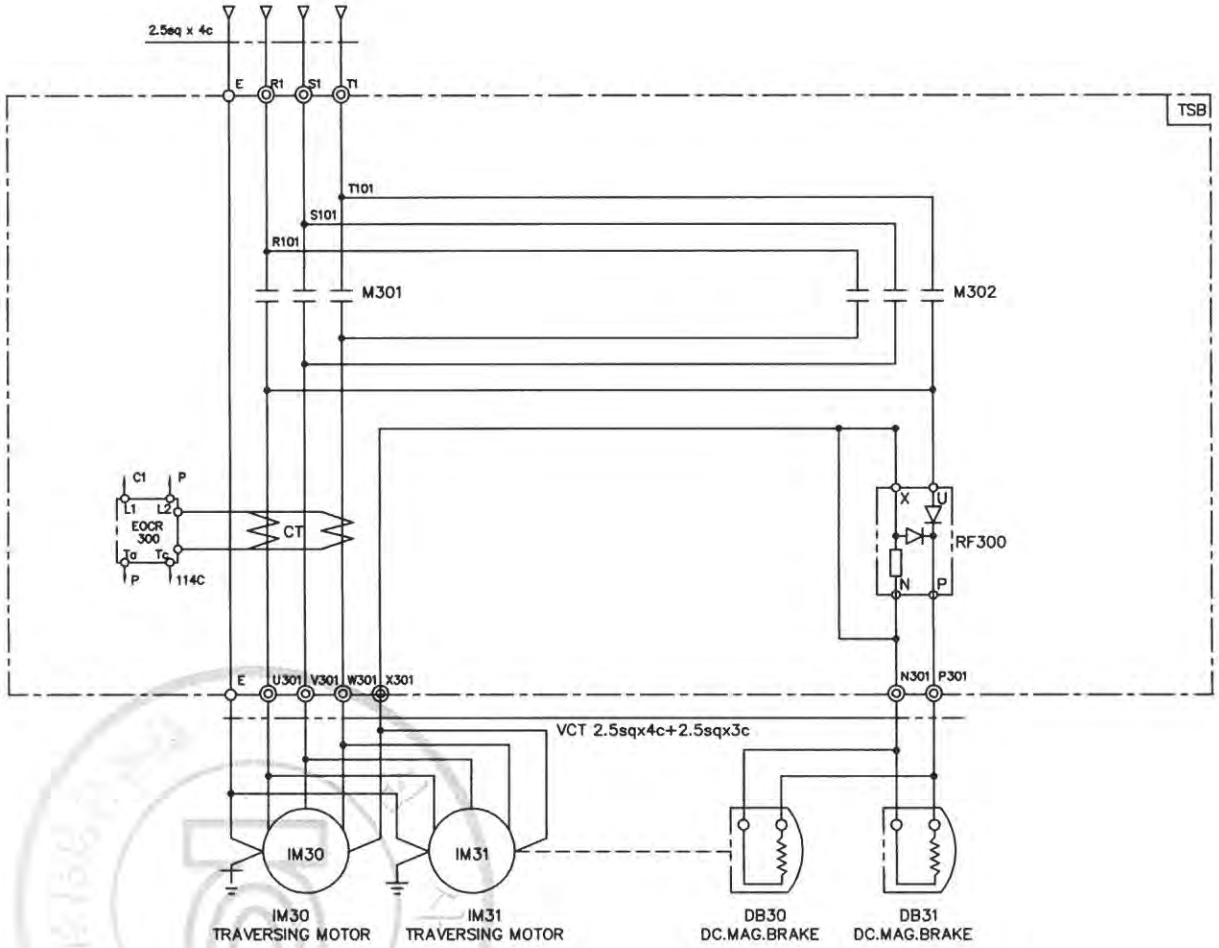

SPECIFICATION / SYMBOLS	TRAVERSING MOTOR	DC MAG' BRAKE	MAGNET CONTACTOR	SILICON RECTIFIER	ELECTRIC OVER CURRENT RELAY	LIMIT SWTCH
DESCRIPTION	IM 30,31	DB 30,31	M301 , M302	RF 300	EOCR 300	LS-301 , LS-302
	0.75KW x 4P AC 3PH 440V 60Hz	DC 100V	DMC22Cb	SR-30	SS-05	KG-L001
	0.5KW x 6P AC 3PH 440V 60Hz	DC 100V	DMC22Cb	SR-30	SS-05	KG-L001
SELECTION MAKER	KUKDONG		DONG-A	ASECO		

REV	DATE	DESCRIPTION	DRAWN	CHECK	APPRVD
A	27.APR.2020	REDRAWING	K.H.Han	-	-

TITLE

CABLE CONNECTION DIAGRAM

KDC10-D

CUSTOMER

극동호이스트 주식회사
KUKDONG HOIST CO., LTD.

DESIGN	SCALE	SHT. NO.	ORDER NO.

DWG. NO. KDC10D-E44

192.168.11.51 / 2020-06-11 16:27:42

불법복제 및 배포금지

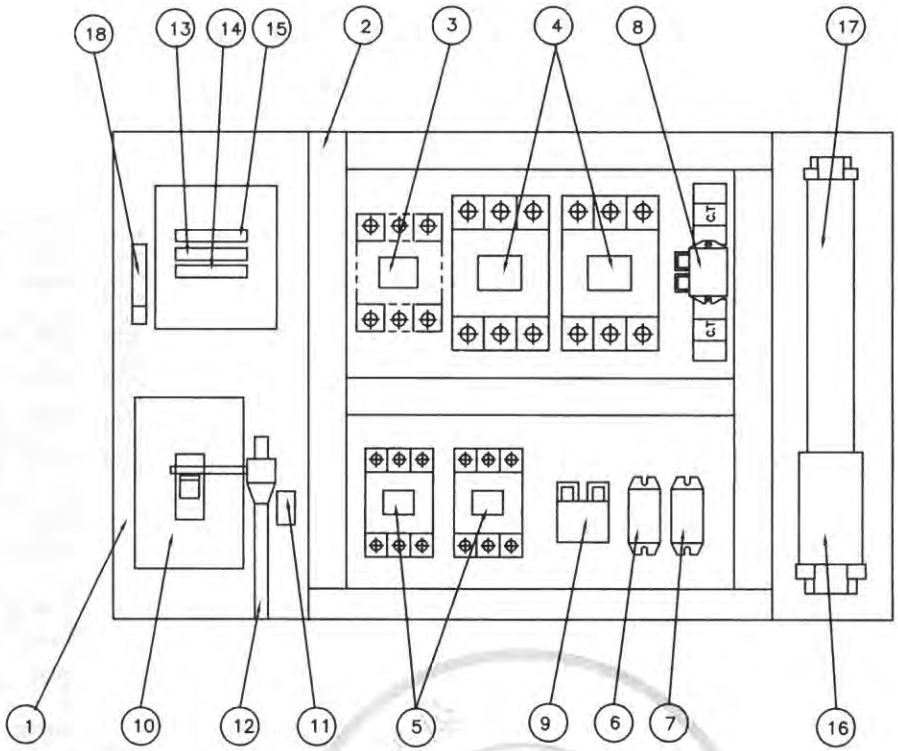

NO	DESCRIPTION	SPECIFICATION	Q'TY	REMARK
1	CHASSIS PLATE		1	아 연 도 금
2	CABLE DUCT	–	1	
3	MAGNET CONTACT	DMC40b	1	M1, MAIN MAG.
4	MAGNET CONTACT	DMC48b	2	HOISTING
5	MAGNET CONTACT	DMC22b	2	CREEP
6	SILICON RECTIFIER	SR–60	1	HOISTING
7	SILICON RECTIFIER	SR–30	1	CREEP
8	E.O.C.R	SS–30	1	HOISTING
9	E.O.C.R	SS–05	1	CREEP
10	MCCB100	50AF/40AT	1	LS–2
11	UPPER LIMIT	AC 600V/3A	1	LS–1
12	LIMIT LEVER	SS275	1	
13	FUSE (F11,F12)	2 A	2	
14	FUSE (F13)	5 A	1	
15	TRANSFORMER	460V/110V,120V, 200VA	1	
16	TERMINAL BLOCK	60A,25A		
17	TERMINAL BLOCK	15A		
18	EARTH TERMINAL	5tx25x50	1	

N O T E

1. UPPER LIMIT LS–1의 접점 허용 전류 용량. : AC 600V, 3A
2. UPPER LIMIT LS–2의 접점 허용 전류 용량. : NFB 53AF
3. EARTH TERMINAL RESISTANCE : 0.018 Ω
4. POWER SOURCE : AC. 3ø 460V 60HZ

N O T E

1. 전선의 색상은 다음과 같다.
   1) 흑색 : 고류 및 직류 전원선로
   2) 적색 : 고류제어회로
   3) 주황색 : 외부 전원에서 공급되는 연동장치 제어회로
   4) 녹색 또는 녹색과 황색 혼용 : 접지선
   5) 청색 : 직류 제어선로
2. CABLE MATERIAL : KIV OR EQUIVALENT, MIN SIZE : 1.5sq
3. 제어용 전선 : 1.5mm KIV,HIV
4. 제작시 다소 변경될수있음.
5. 외함 개방구조는 다음과 같을것.
   1) 외함 개방시 충전부분이 차단되도록 할것.
   2) 외함 개방후 충전되어있는 부분은 IP2X 이상의 직접 접촉 방호가 되어있을것.

REV	DATE	DESCRIPTION	DRAWN	CHECK	APPRVD
A	27.APR.2020	REDRAWING	K.H.Han	-	-

TITLE: CABLE CONNECTION DIAGRAM

KDC10-D

CUSTOMER

극동호이스트 주식회사
KUKDONG HOIST CO., LTD.

DESIGN	SCALE	SHT. NO.	ORDER NO.

DWG. NO. KDC10D-BA50

192.168.11.51 / 2020-06-11 16:27:42

불법복제 및 배포금지

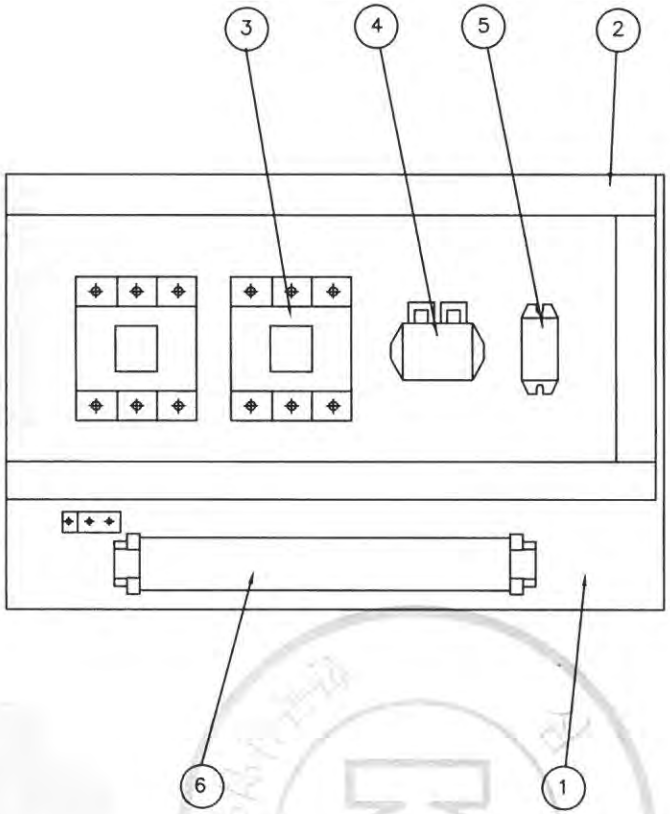

NO	DESCRIPTION	SPEC	Q'TY	REMARK
1	CHASSIS PLATE	–	1	아 연 도 금
2	CABLE DUCT	–	1	
3	MAGNET CONTACTOR	DMC22b	2	TRAVERSING
4	E.O.C.R	SS–05	1	TRAVERSING
5	SILICON RECTIFIER	SR–30	1	TRAVERSING
6	TERMINAL BLOCK	25A , 15A	1	TRAVERSING

REV	DATE	DESCRIPTION	DRAWN	CHECK	APPRVD
A	27.APR.2020	REDRAWING	K.H.Han	-	-

TITLE
CABLE CONNECTION DIAGRAM
KDC10-D

CUSTOMER

극동호이스트 주식회사
KUKDONG HOIST CO., LTD.

DESIGN	SCALE	SHT. NO.	ORDER NO.

DWG. NO. KDC10D-BA51

192.168.11.51 / 2020-06-11 16:27:42
불법복제 및 배포금지

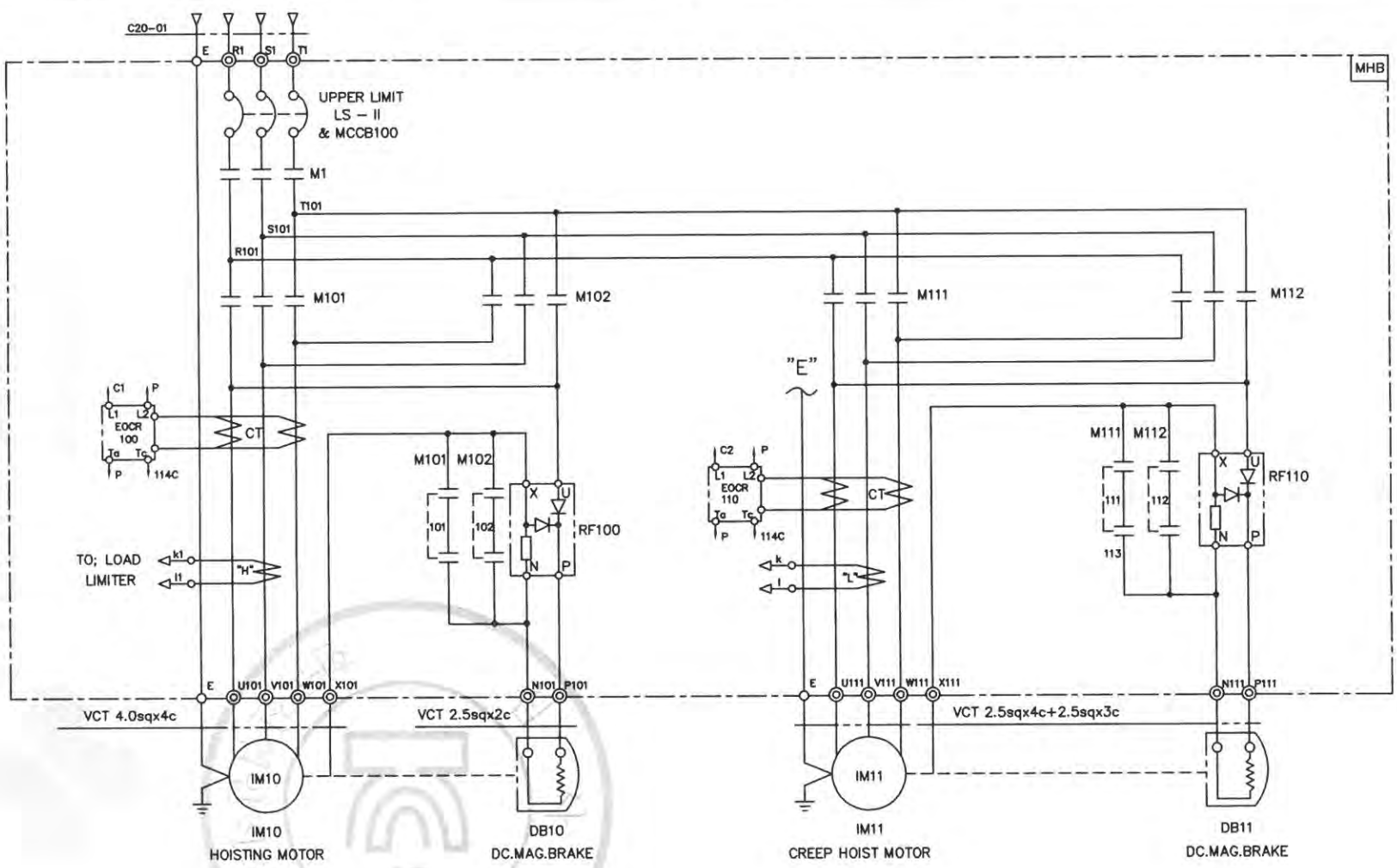

SPECIFICATION / SYMBOLS / DESCRIPTION	HOISTING POWER	HOISTING MOTOR	CREEP MOTOR	DC.MAG' BRAKE	NO FUSE BREAKER	TRANSFORMER	FUSE		MAIN MAGNET	MAGNET CONTACTOR		UPPER LIMIT	ELECTRIC OVER CURRENT RELAY		SILICON RECTIFIER		LOAD LIMITER	CABLE
	HOIST	IM 10	IM 11	DB10, 11	LS-II & MCCB100	TR 1	F11,F12	F13	M1	M101,M102	M111,M112	LS-I, LS-II	EOCR100	EOCR110	RF100	RF110	LOAD LIMITER	C20-01
	10TON AC3PH 460V 60Hz	9KWx8P	1.1KWx8P	DC 100V	ABS53c/40AT	460V/110V,120V,200VA	2A	5A	DMC40b	DMC48b	DMC22b	AC 600V 3A	SS-30	SS-05	SR-60	SR-30	JDL-100	VCT 6.0sqx4c
SELECTION / MAKER	KUK DONG				LS	SHINHAN	–		DONG-A	DONG-A		KUK DONG	ASECO				JUNGHO	DONGIL

REV	DATE	DESCRIPTION	DRAWN	CHECK	APPRVD
A	27.APR.2020	REDRAWING	K.H.Han	-	-

TITLE
CABLE CONNECTION DIAGRAM
KDC10-D

CUSTOMER

극동호이스트 주식회사
KUKDONG HOIST CO., LTD.

DESIGN	SCALE	SHT. NO.	ORDER NO.

DWG. NO. KDC10D-E51

192.168.11.51 / 2020-06-11 16:27:42
불법복제 및 배포금지

POWER CIRCUIT

HOISTING MOTION | CREEP HOIST MOTION

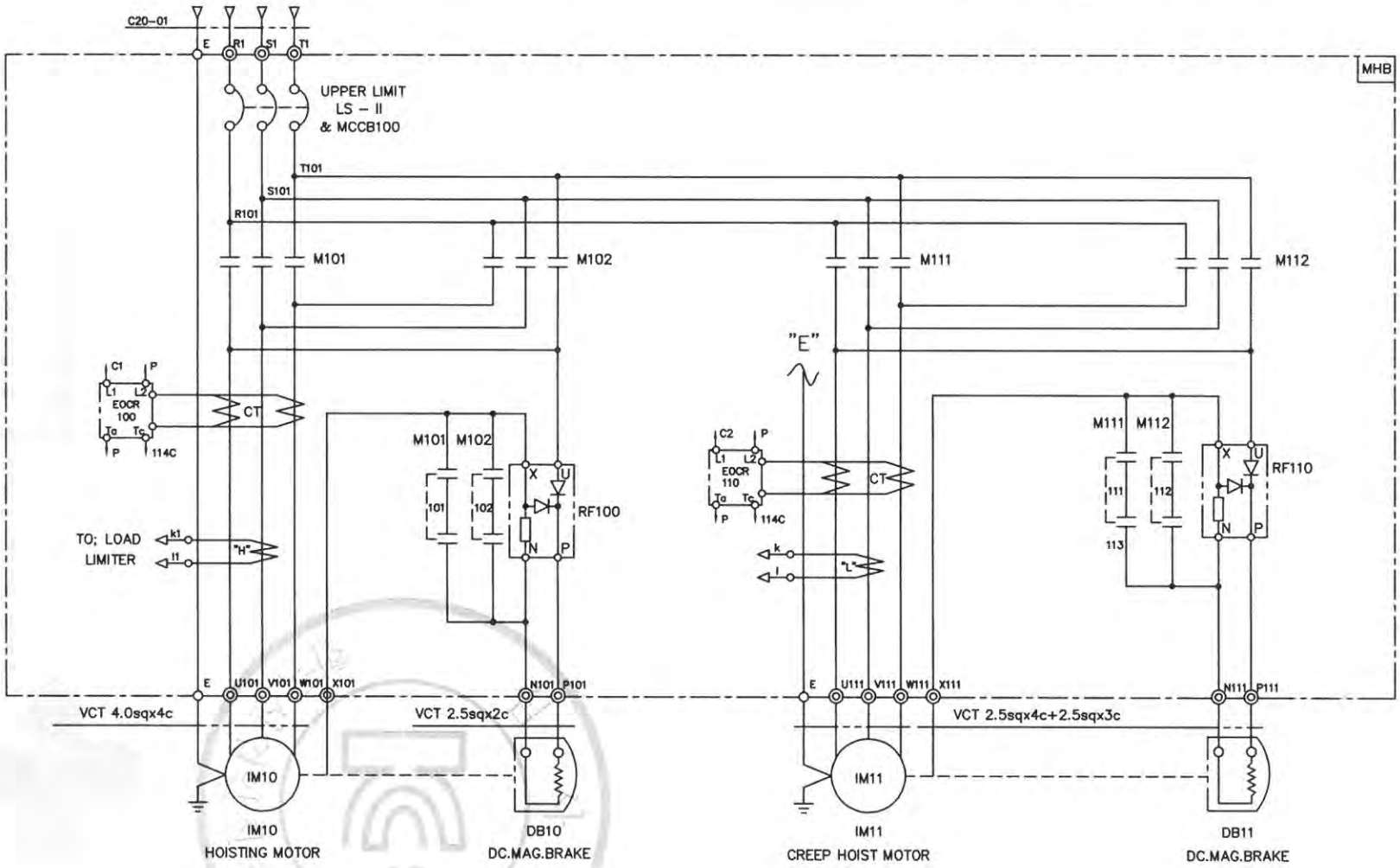

SPECIFICATION / SYMBOLS	HOISTING POWER	HOISTING MOTOR	CREEP MOTOR	DC.MAG' BRAKE	NO FUSE BREAKER	TRANSFORMER	FUSE		MAGNET CONTACTOR		UPPER LIMIT	ELECTRIC OVER CURRENT RELAY		SILICON RECTIFIER		LOAD LIMITER	CABLE
DESCRIPTION	HOIST	IM 10	IM 11	DB10, 11	LS-II & MCCB100	TR 1	F11,F12	F13	M101,M102	M111,M112	LS-I, LS-II	EOCR100	EOCR110	RF100	RF110	LOAD LIMITER	C20-01
	10TON AC3PH 460V 60Hz	9KWx8P	1.1KWx8P	DC 100V	ABS53c/40AT	460V/110V,120V,200VA	2A	5A	DMC48b	DMC22b	AC 600V 3A	SS-30	SS-05	SR-60	SR-30	JDL-100	VCT 6.0sqx4c
SELECTION / MAKER	KUK DONG				LS	SHINHAN	-		DONG-A		KUK DONG	ASECO				JUNGHO	DONGIL

REV	DATE	DESCRIPTION	DRAWN	CHECK	APPRVD
A	27.APR.2020	REDRAWING	K.H.Han	-	-

TITLE: CABLE CONNECTION DIAGRAM

KDC10-D

CUSTOMER

극동호이스트 주식회사
KUKDONG HOIST CO., LTD.

DESIGN	SCALE	SHT. NO.	ORDER NO.

DWG. NO. KDC10D-E52

192.168.11.51 / 2020-06-11 16:27:42

불법복제 및 배포금지

POWER CIRCUIT

TRAVERSING MOTION

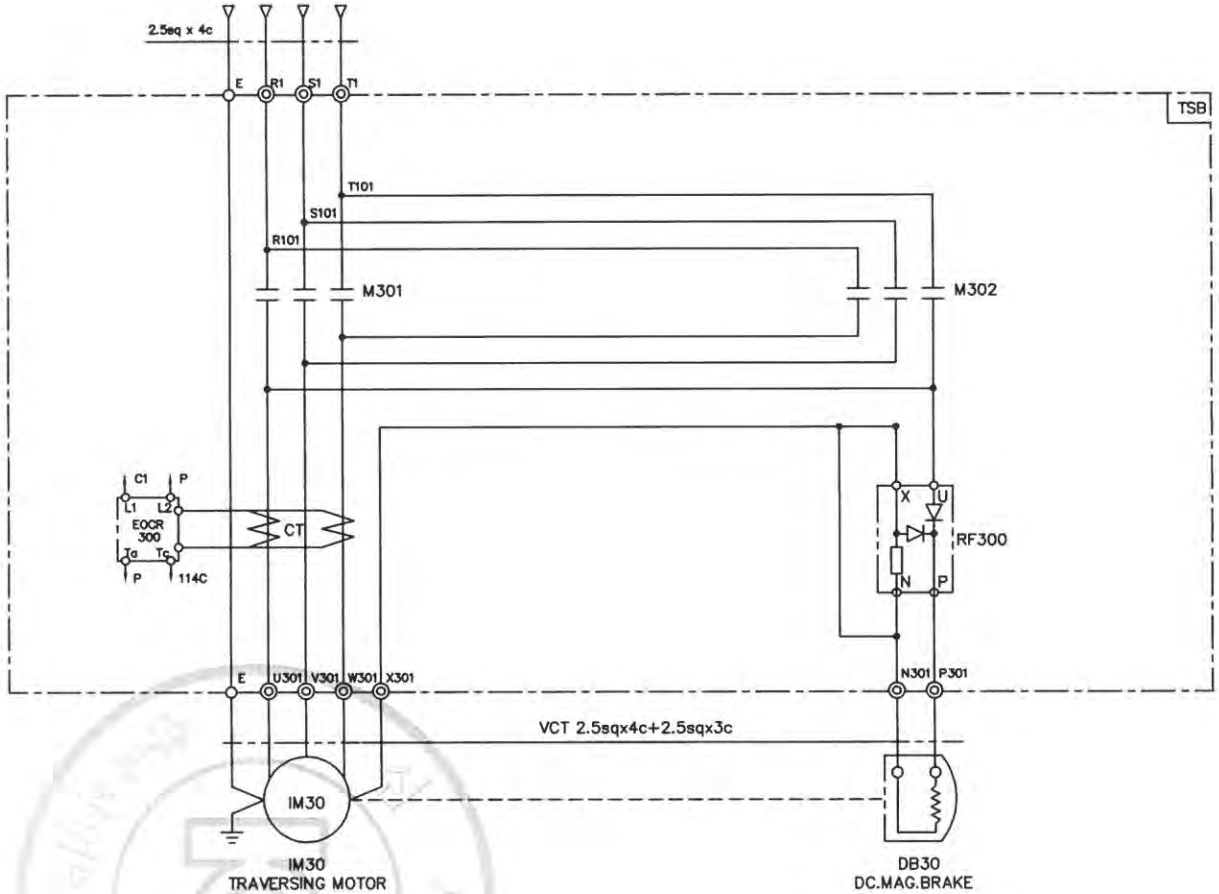

SPECIFICATION / SYMBOLS	TRAVERSING MOTOR	DC MAG' BRAKE	MAGNET CONTACTOR	SILICON RECTIFIER	ELECTRIC OVER CURRENT RELAY	LIMIT SWTCH
DESCRIPTION	IM 30	DB 30	M301 , M302	RF 300	EOCR 300	LS-301 , LS-302
	0.75KW x 4P AC 3PH 460V 60Hz	DC 100V	DMC22Cb	SR-30	SS-05	KG-L001
	0.5KW x 6P AC 3PH 460V 60Hz	DC 100V	DMC22Cb	SR-30	SS-05	KG-L001
SELECTION / MAKER	KUKDONG		DONG-A	ASECO		

REV	DATE	DESCRIPTION	DRAWN	CHECK	APPRVD
A	27.APR.2020	REDRAWING	K.H.Han	-	-

TITLE

CABLE CONNECTION DIAGRAM

KDC10-D

CUSTOMER

극동호이스트 주식회사
KUKDONG HOIST CO., LTD.

DESIGN	SCALE	SHT. NO.	ORDER NO.

DWG. NO. KDC10D-E53

192.168.11.51 / 2020-06-11 16:27:42

불법복제 및 배포금지

POWER CIRCUIT

TRAVERSING MOTION

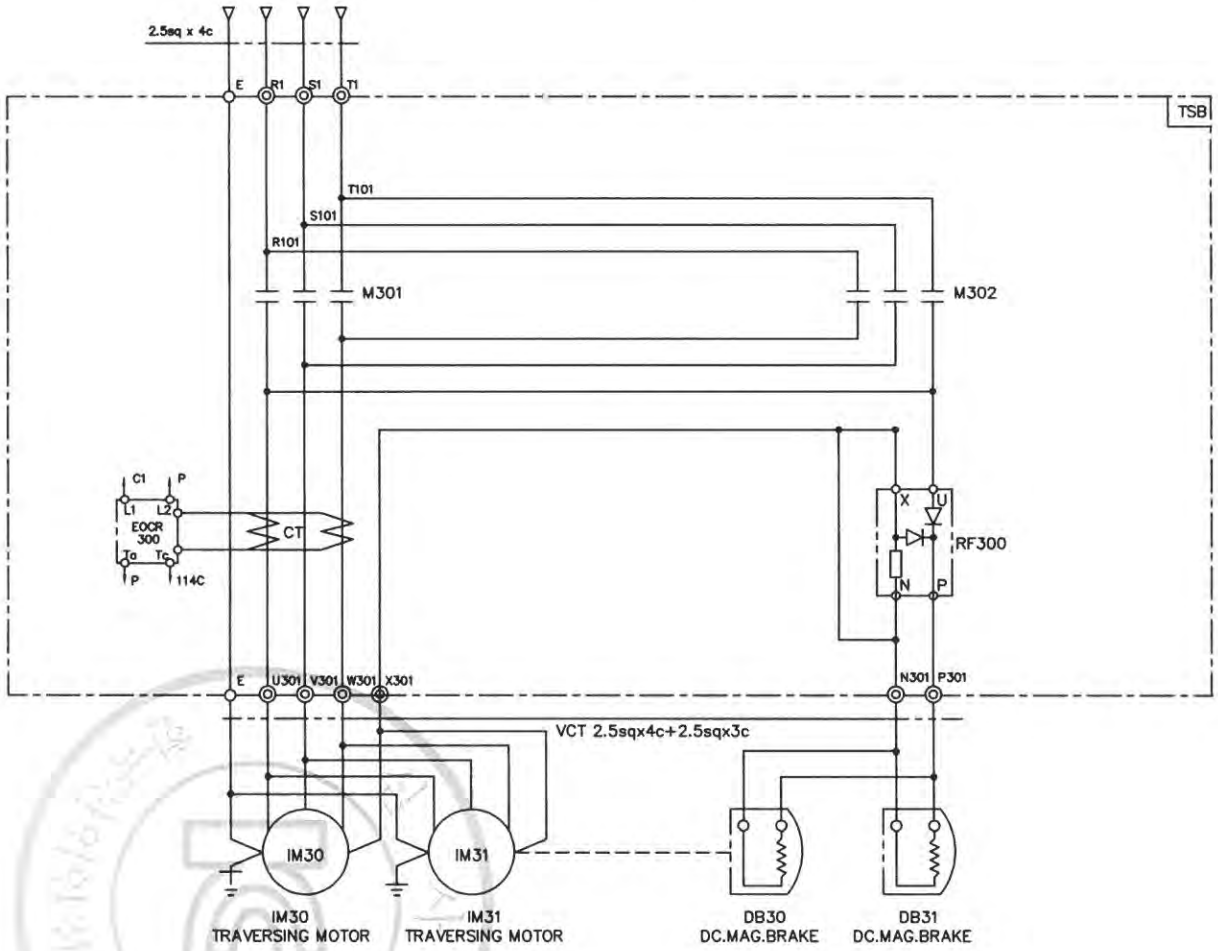

SPECIFICATION / SYMBOLS	TRAVERSING MOTOR	DC MAG' BRAKE	MAGNET CONTACTOR	SILICON RECTIFIER	ELECTRIC OVER CURRENT RELAY	LIMIT SWTCH
DESCRIPTION	IM 30,31	DB 30,31	M301 , M302	RF 300	EOCR 300	LS-301 , LS-302
	0.75KW x 4P AC 3PH 460V 60Hz	DC 100V	DMC22Cb	SR-30	SS-05	KG-L001
	0.5KW x 6P AC 3PH 460V 60Hz	DC 100V	DMC22Cb	SR-30	SS-05	KG-L001
SELECTION / MAKER	KUKDONG		DONG-A	ASECO		

REV	DATE	DESCRIPTION	DRAWN	CHECK	APPRVD
A	27.APR.2020	REDRAWING	K.H.Han	-	-

TITLE: CABLE CONNECTION DIAGRAM

KDC10-D

CUSTOMER

극동호이스트 주식회사
KUKDONG HOIST CO., LTD.

DESIGN	SCALE	SHT. NO.	ORDER NO.

DWG. NO. KDC10D-E54

불법복제 및 배포금지
192.168.11.51 / 2020-06-11 16:27:42

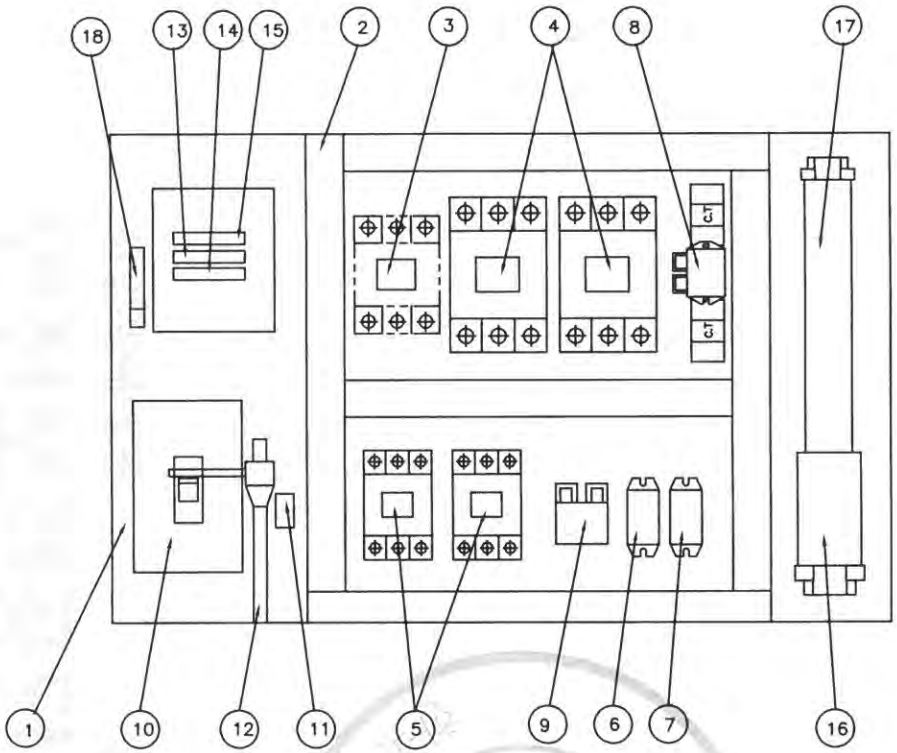

NO	DESCRIPTION	SPECIFICATION	Q'TY	REMARK
1	CHASSIS PLATE		1	아 연 도 금
2	CABLE DUCT	–	1	
3	MAGNET CONTACT	DMC40b	1	M1, MAIN MAG.
4	MAGNET CONTACT	DMC48b	2	HOISTING
5	MAGNET CONTACT	DMC22b	2	CREEP
6	SILICON RECTIFIER	SR–60	1	HOISTING
7	SILICON RECTIFIER	SR–30	1	CREEP
8	E.O.C.R	SS–30	1	HOISTING
9	E.O.C.R	SS–05	1	CREEP
10	MCCB100	50AF/40AT	1	LS–2
11	UPPER LIMIT	AC 600V/3A	1	LS–1
12	LIMIT LEVER	SS275	1	
13	FUSE (F11,F12)	2 A	2	
14	FUSE (F13)	5 A	1	
15	TRANSFORMER	480V/110V,120V, 200VA	1	
16	TERMINAL BLOCK	60A,25A		
17	TERMINAL BLOCK	15A		
18	EARTH TERMINAL	5tx25x50	1	

NOTE

1. UPPER LIMIT LS–1의 접점 허용 전류 용량. : AC 600V, 3A
2. UPPER LIMIT LS–2의 접점 허용 전류 용량. : NFB 53AF
3. EARTH TERMINAL RESISTANCE : 0.018 Ω
4. POWER SOURCE : AC. 3ø 480V 60HZ

NOTE

1. 전선의 색상은 다음과 같다.
   1) 흑색 : 교류 및 직류 전원선로
   2) 적색 : 교류제어회로
   3) 주황색 : 외부 전원에서 공급되는 연동장치 제어회로
   4) 녹색 또는 녹색과 황색 혼용 : 접지선
   5) 청색 : 직류 제어선로
2. CABLE MATERIAL : KIV OR EQUIVALENT, MIN SIZE : 1.5sq
3. 제어용 전선 : 1.5mm KIV,HIV
4. 제작시 다소 변경될수있음.
5. 외함 개방구조는 다음과 같을것.
   1) 외함 개방시 충전부분이 차단되도록 할것.
   2) 외함 개방후 충전되어있는 부분은 IP2X 이상의 직접 접촉 방호가 되어있을것.

REV	DATE	DESCRIPTION	DRAWN	CHECK	APPRVD
A	27.APR.2020	REDRAWING	K.H.Han	-	-

TITLE: CABLE CONNECTION DIAGRAM

KDC10-D

CUSTOMER

극동호이스트 주식회사
KUKDONG HOIST CO., LTD.

DESIGN	SCALE	SHT. NO.	ORDER NO.

DWG. NO. KDC10D-BA60

192.168.11.51 / 2020-06-11 16:27:42

불법복제 및 배포금지

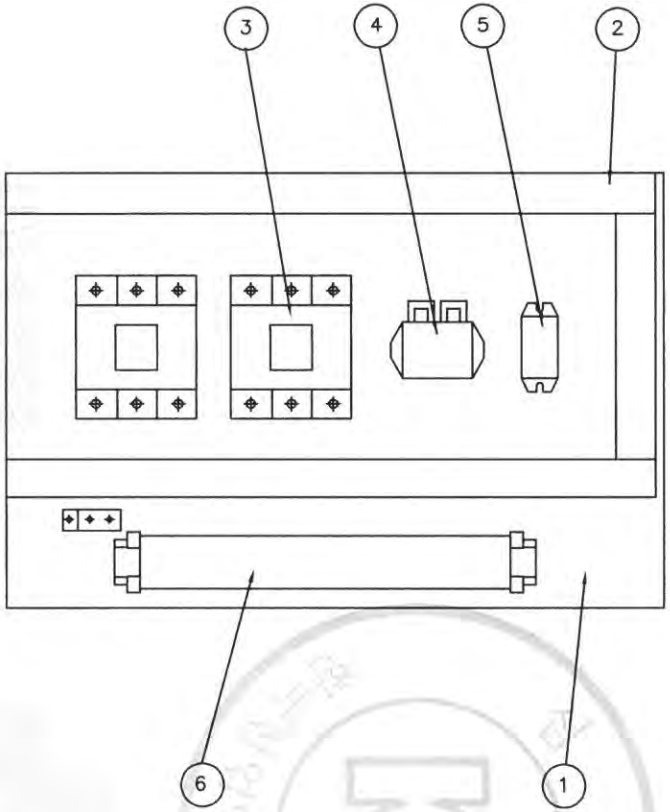

NO	DESCRIPTION	SPEC	Q'TY	REMARK
1	CHASSIS PLATE	–	1	아 연 도 금
2	CABLE DUCT	–	1	
3	MAGNET CONTACTOR	DMC22b	2	TRAVERSING
4	E.O.C.R	SS–05	1	TRAVERSING
5	SILICON RECTIFIER	SR–30	1	TRAVERSING
6	TERMINAL BLOCK	25A , 15A	1	TRAVERSING

REV	DATE	DESCRIPTION	DRAWN	CHECK	APPRVD
A	27.APR.2020	REDRAWING	K.H.Han	-	-

TITLE
CABLE CONNECTION DIAGRAM
KDC10-D

CUSTOMER

극동호이스트 주식회사
KUKDONG HOIST CO., LTD.

DESIGN	SCALE	SHT. NO.	ORDER NO.

DWG. NO. KDC10D-BA61

192.168.11.51 / 2020-06-11 16:27:42
무단배포금지

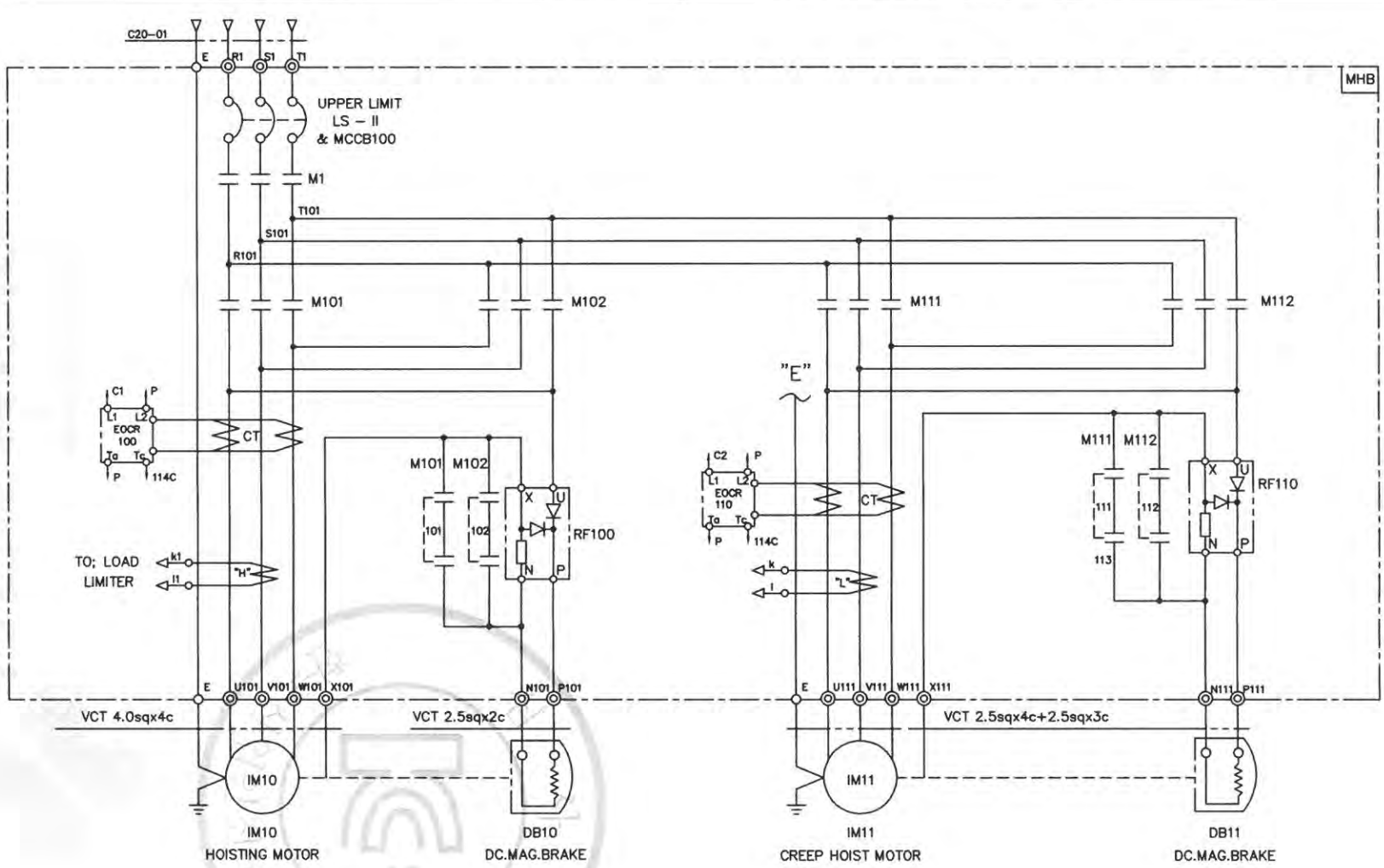

SPECIFICATION / SYMBOLS / DESCRIPTION	HOISTING POWER	HOISTING MOTOR	CREEP MOTOR	DC.MAG' BRAKE	NO FUSE BREAKER	TRANSFORMER	FUSE		MAIN MAGNET	MAGNET CONTACTOR		UPPER LIMIT	ELECTRIC OVER CURRENT RELAY		SILICON RECTIFIER		LOAD LIMITER	CABLE
	HOIST	IM 10	IM 11	DB10, 11	LS-II & MCCB100	TR 1	F11,F12	F13	M1	M101,M102	M111,M112	LS-I, LS-II	EOCR100	EOCR110	RF100	RF110	LOAD LIMITER	C20-01
	10TON AC3PH 480V 60Hz	9KWx8P	1.1KWx8P	DC 100V	ABS53c/40AT	480V/110V,120V,200VA	2A	5A	DMC40b	DMC48b	DMC22b	AC 600V 3A	SS-30	SS-05	SR-60	SR-30	JDL-100	VCT 6.0sqx4c
SELECTION / MAKER	KUK DONG				LS	SHINHAN	-		DONG-A	DONG-A		KUK DONG	ASECO				JUNGHO	DONGIL

REV	DATE	DESCRIPTION	DRAWN	CHECK	APPRVD
A	27.APR.2020	REDRAWING	K.H.Han	-	-

TITLE
CABLE CONNECTION DIAGRAM
KDC10-D

CUSTOMER

극동호이스트 주식회사
KUKDONG HOIST CO., LTD.

DESIGN	SCALE	SHT. NO.	ORDER NO.

DWG. NO. KDC10D-E61

불법복제 및 배포금지
192.168.11.51 / 2020-06-11 16:27:42

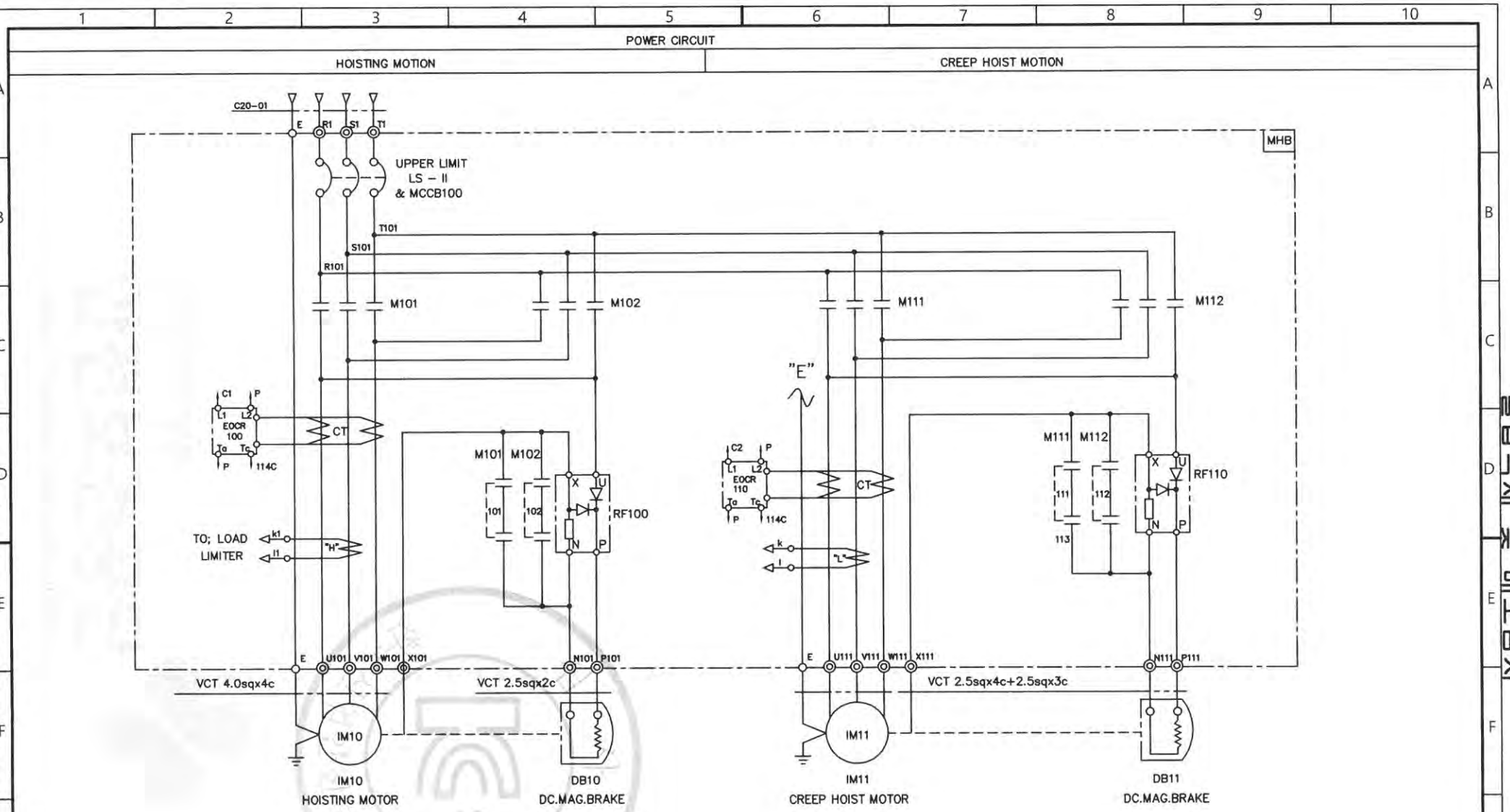

SPECIFICATION / SYMBOLS / DESCRIPTION	HOISTING POWER	HOISTING MOTOR	CREEP MOTOR	DC.MAG BRAKE	NO FUSE BREAKER	TRANSFORMER	FUSE		MAGNET CONTACTOR		UPPER LIMIT	ELECTRIC OVER CURRENT RELAY		SILICON RECTIFIER		LOAD LIMITER	CABLE
SYMBOLS	HOIST	IM 10	IM 11	DB10, 11	LS-II & MCCB100	TR 1	F11,F12	F13	M101,M102	M111,M112	LS-I, LS-II	EOCR100	EOCR110	RF100	RF110	LOAD LIMITER	C20-01
DESCRIPTION	10TON AC3PH 480V 60Hz	9KWx8P	1.1KWx8P	DC 100V	ABS53c/40AT	480V/110V,120V,200VA	2A	5A	DMC48b	DMC22b	AC 600V 3A	SS-30	SS-05	SR-60	SR-30	JDL-100	VCT 6.0sqx4c
SELECTION / MAKER	KUK DONG				LS	SHINHAN	-		DONG-A		KUK DONG	ASECO				JUNGHO	DONGIL

REV	DATE	DESCRIPTION	DRAWN	CHECK	APPRVD
A	27.APR.2020	REDRAWING	K.H.Han	-	-

TITLE
CABLE CONNECTION DIAGRAM
KDC10-D

CUSTOMER

극동호이스트 주식회사
KUKDONG HOIST CO., LTD.

DESIGN	SCALE	SHT. NO.	ORDER NO.

DWG. NO. KDC10D-E62

불법복제 및 배포금지
192.168.11.51 / 2020-06-11 16:27:42

POWER CIRCUIT

TRAVERSING MOTION

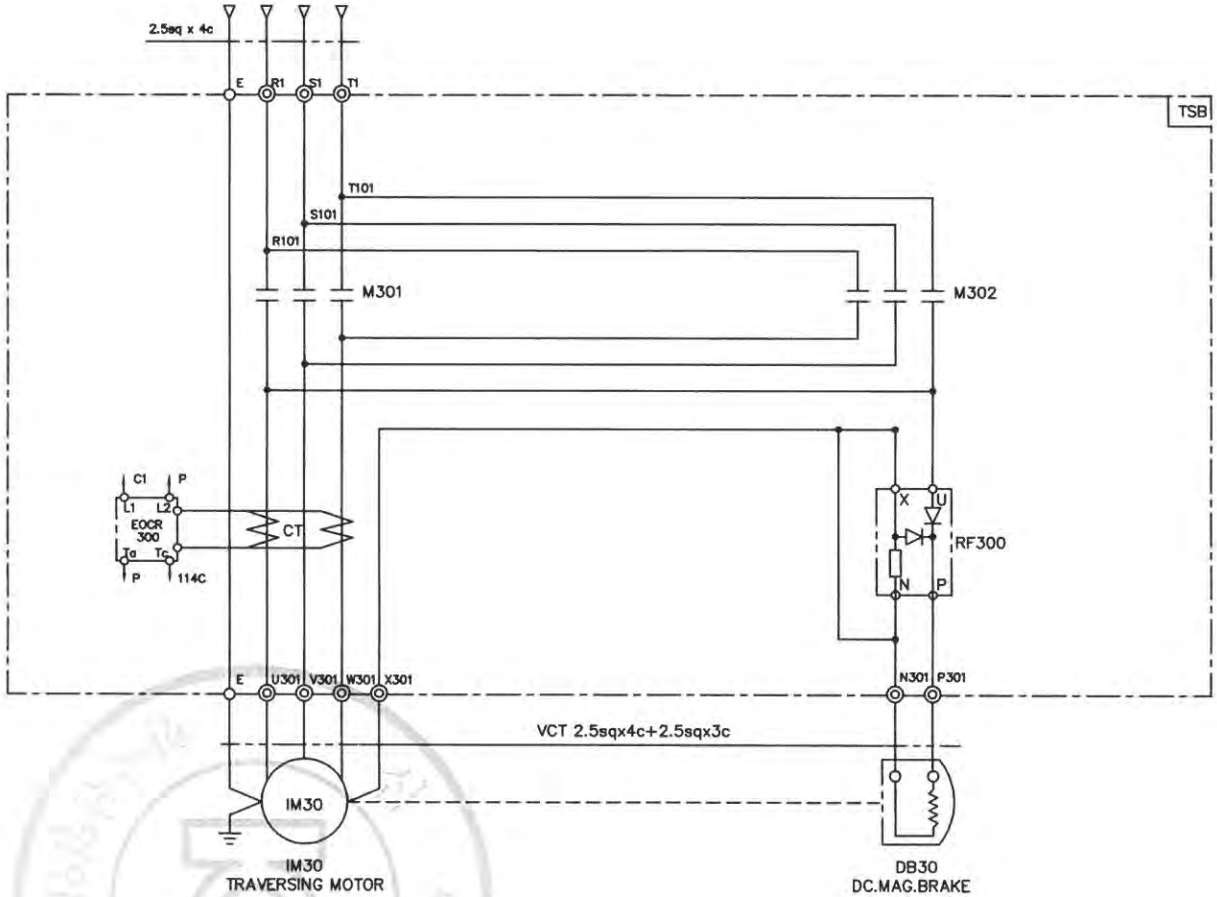

SPECIFICATION / SYMBOLS	TRAVERSING MOTOR	DC MAG' BRAKE	MAGNET CONTACTOR	SILICON RECTIFIER	ELECTRIC OVER CURRENT RELAY	LIMIT SWTCH
DESCRIPTION	IM 30	DB 30	M301 , M302	RF 300	EOCR 300	LS-301 , LS-302
	0.75KW x 4P AC 3PH 480V 60Hz	DC 100V	DMC22Cb	SR-30	SS-05	KG-L001
	0.5KW x 6P AC 3PH 480V 60Hz	DC 100V	DMC22Cb	SR-30	SS-05	KG-L001
SELECTION MAKER	KUKDONG		DONG-A	ASECO		

REV	DATE	DESCRIPTION	DRAWN	CHECK	APPRVD
A	27.APR.2020	REDRAWING	K.H.Han	-	-

TITLE: CABLE CONNECTION DIAGRAM

KDC10-D

CUSTOMER

극동호이스트 주식회사
KUKDONG HOIST CO., LTD.

DESIGN	SCALE	SHT. NO.	ORDER NO.

DWG. NO. KDC10D-E63

192.168.11.51 / 2020-06-11 16:27:42

불법복제 금 배포금지

POWER CIRCUIT

TRAVERSING MOTION

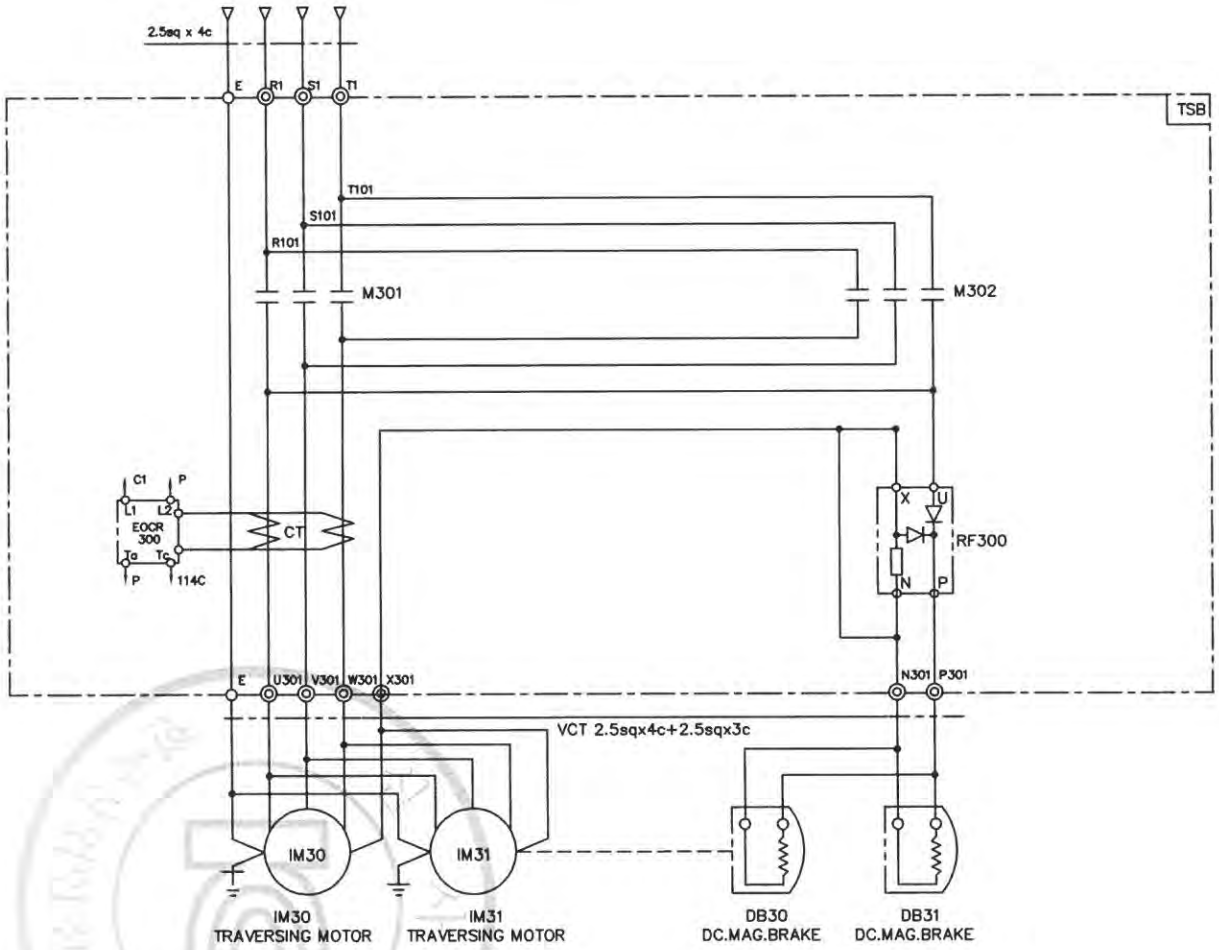

SPECIFICATION / SYMBOLS / DESCRIPTION	TRAVERSING MOTOR	DC MAG' BRAKE	MAGNET CONTACTOR	SILICON RECTIFIER	ELECTRIC OVER CURRENT RELAY	LIMIT SWTCH
	IM 30,31	DB 30,31	M301 , M302	RF 300	EOCR 300	LS-301 , LS-302
	0.75KW x 4P AC 3PH 480V 60Hz	DC 100V	DMC22Cb	SR-30	SS-05	KG-L001
	0.5KW x 6P AC 3PH 480V 60Hz	DC 100V	DMC22Cb	SR-30	SS-05	KG-L001
SELECTION MAKER	KUKDONG		DONG-A	ASECO		

REV	DATE	DESCRIPTION	DRAWN	CHECK	APPRVD
A	27.APR.2020	REDRAWING	K.H.Han	-	-

TITLE

CABLE CONNECTION DIAGRAM

KDC10-D

CUSTOMER

극동호이스트 주식회사
KUKDONG HOIST CO., LTD.

DESIGN	SCALE	SHT. NO.	ORDER NO.

DWG. NO. KDC10D-E64

192.168.11.51 / 2020-06-11 16:27:42

불법복제 및 배포금지

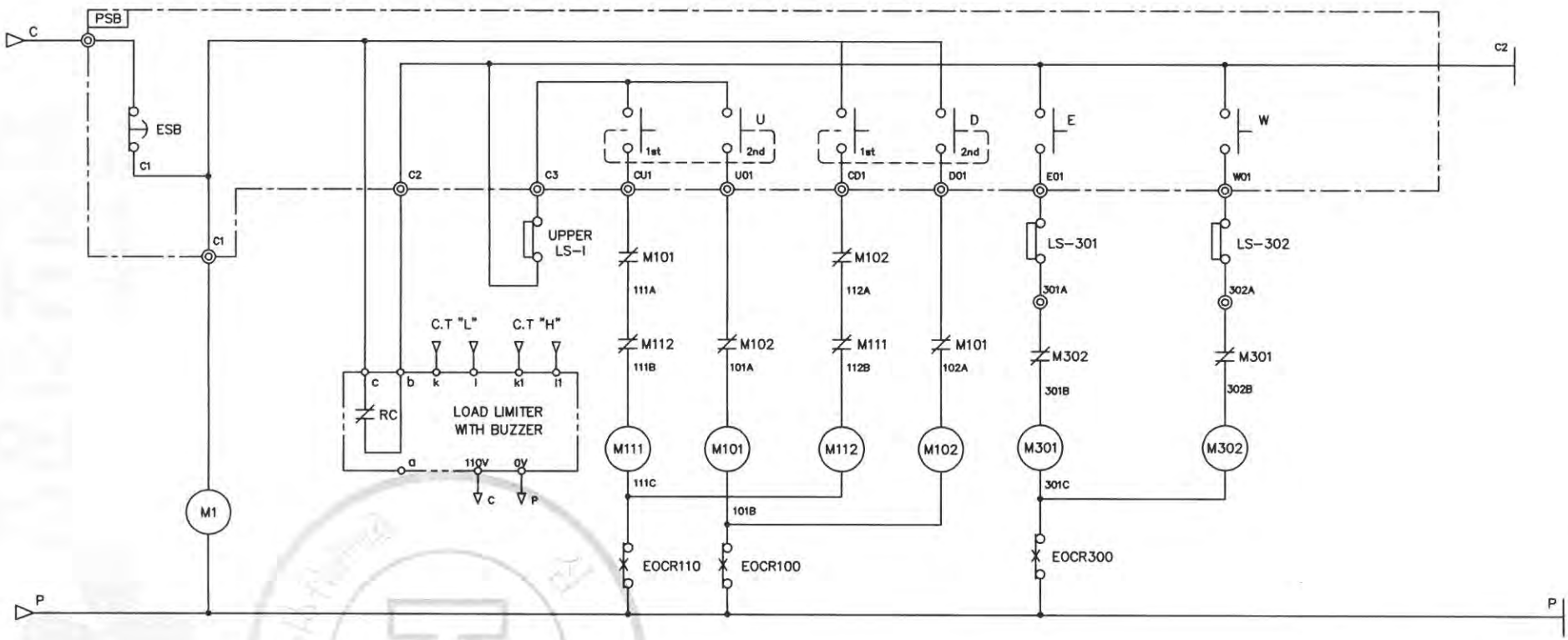

SPECIFICATION / SYMBOLS / DESCRIPTION	UPPER LIMIT	PENDANT P.B S/W	LOAD LIMITER	LIMIT SWITCH
	LS-1	E.S.B	LOAD LIMITER	LS-301,302
	AC 600V 3A	250V 3A	JDL-100	KG - L001
	AC 600V 3A	250V 3A	JDL-100	KG - L001
MAKER	KUNHUNG	KG-AUTO	JUNGHO	KG-AUTO

REV	DATE	DESCRIPTION	DRAWN	CHECK	APPRVD
A	27.APR.2020	REDRAWING	K.H.Han	-	-

TITLE: CONTROL CIRCUIT DIAGRAM

KDC10-D

CUSTOMER

극동호이스트 주식회사
KUKDONG HOIST CO., LTD.

DESIGN	SCALE	SHT. NO.	ORDER NO.

DWG. NO. KDC10D-E001

192.168.11.51 / 2020-06-11 16:27:42
불법복제 및 배포금지

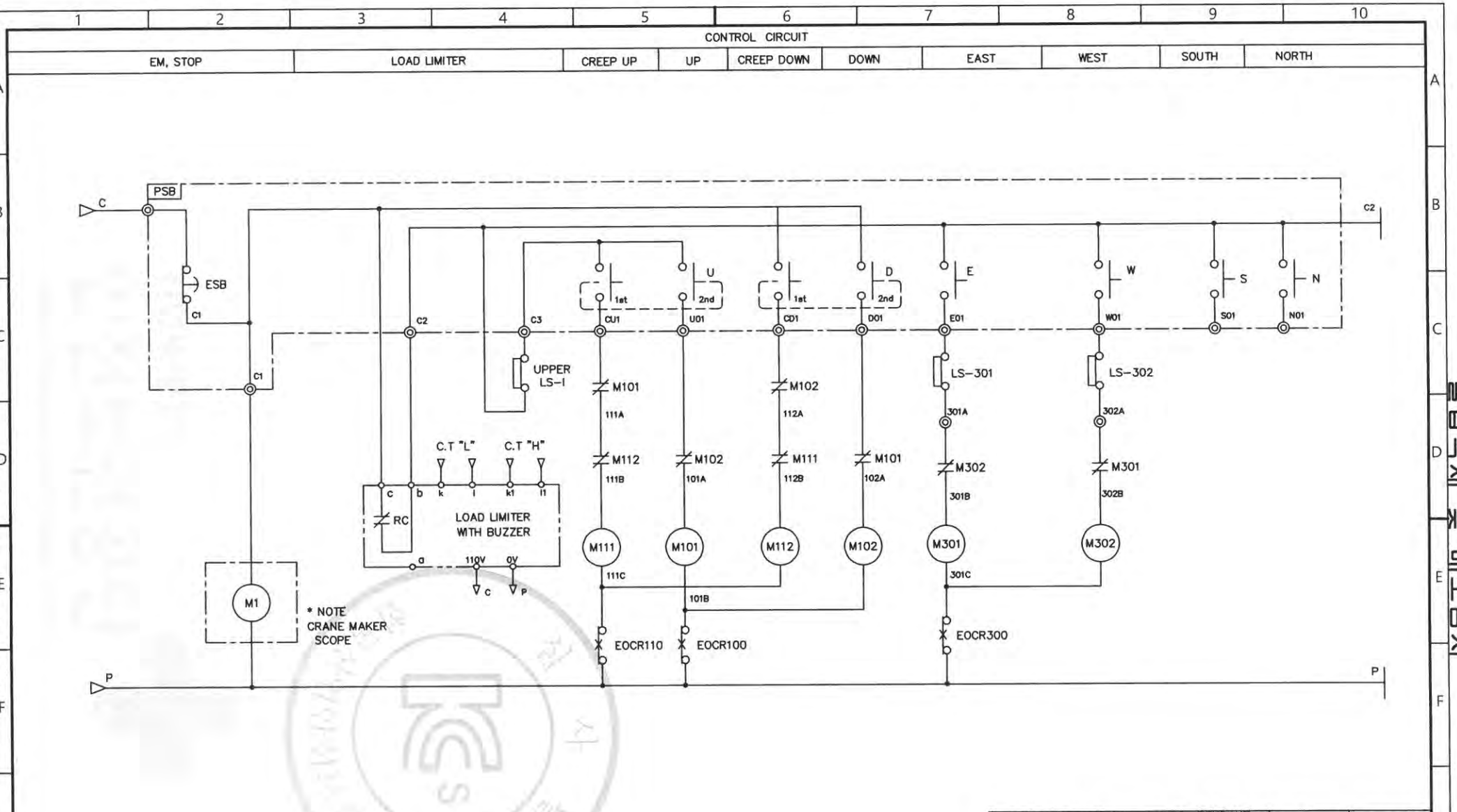

SPECIFICATION / SYMBOLS / DESCRIPTION	UPPER LIMIT	PENDANT P.B S/W	LOAD LIMITER	LIMIT SWITCH
	LS-1	E.S.B	LOAD LIMITER	LS-301,302
	AC 600V 3A	250V 3A	JDL-100	KG - L001
	AC 600V 3A	250V 3A	JDL-100	KG - L001
MAKER	KUNHUNG	KG-AUTO	JUNG-HO	KG-AUTO

REV	DATE	DESCRIPTION	DRAWN	CHECK	APPRVD
A	27.APR.2020	REDRAWING	K.H.Han	-	-

TITLE
CONTROL CIRCUIT DIAGRAM
KDC10-D

CUSTOMER

극동호이스트 주식회사
KUKDONG HOIST CO., LTD.

DESIGN	SCALE	SHT. NO.	ORDER NO.

DWG. NO. KDC10D-E002

192.168.11.51 / 2020-06-11 16:27:42

무단복제 및 배포금지

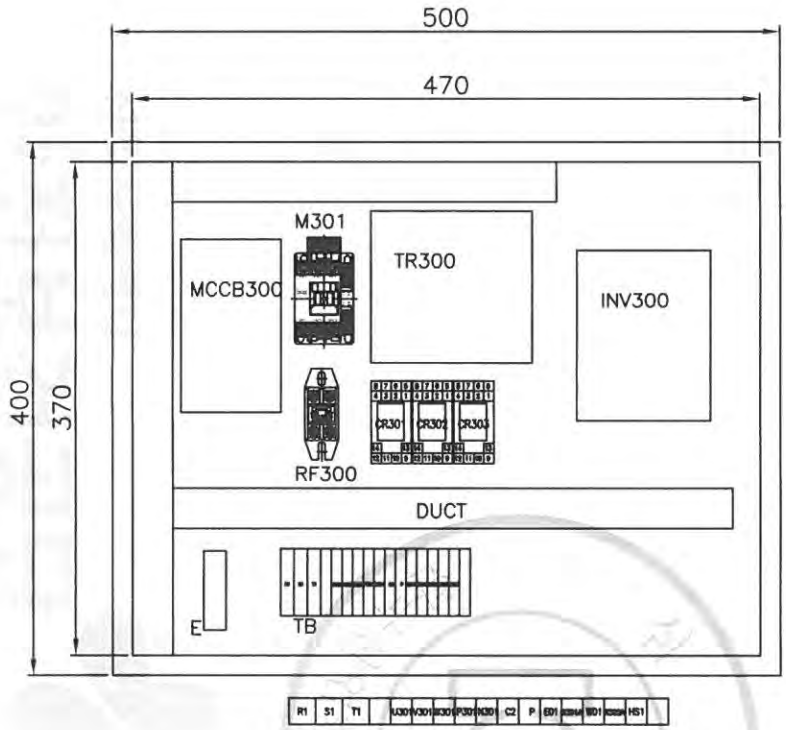

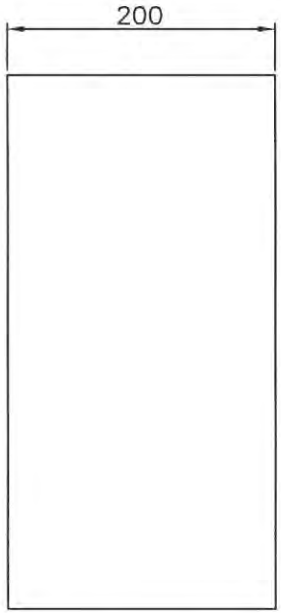

NO.	DESCRIPTION	MT'L	WEIGHT(Kg) TOTAL	WEIGHT(Kg) SUB	QT'Y TOTAL	QT'Y SUB	REMARKS.
1	T/S BOX	PUR			1		
2	측판	SS400			1		
3	MCCB	PUR			1		
4	MC	PUR			1		
5	RF	PUR			1		
6	RELAY & SCOKET	PUR			1		
7	TR	PUR			1		
8	INVERTER	PUR			1		
9	TERMINAL BLOCK	PUR			1		
10	DUCT	PUR			1		
11	EARTH BUS BAR	PUR			1		

REV	DATE	DESCRIPTION	DRAWN	CHECK	APPRVD
A	27.APR.2020	REDRAWING	K.H.Han	-	-

TITLE
INVERTER PANEL LAY OUT (TRAVERSING)
KDC10-D

CUSTOMER

극동호이스트 주식회사
KUKDONG HOIST CO., LTD.

DESIGN	SCALE	SHT. NO.	ORDER NO.

DWG. NO. KDC10D-IBA1

192.168.11.51 / 2020-06-11 16:27:42
불법복제 금지 배포금지

TRAVERSING MOTION

POWER CIRCUIT DIAGRAM

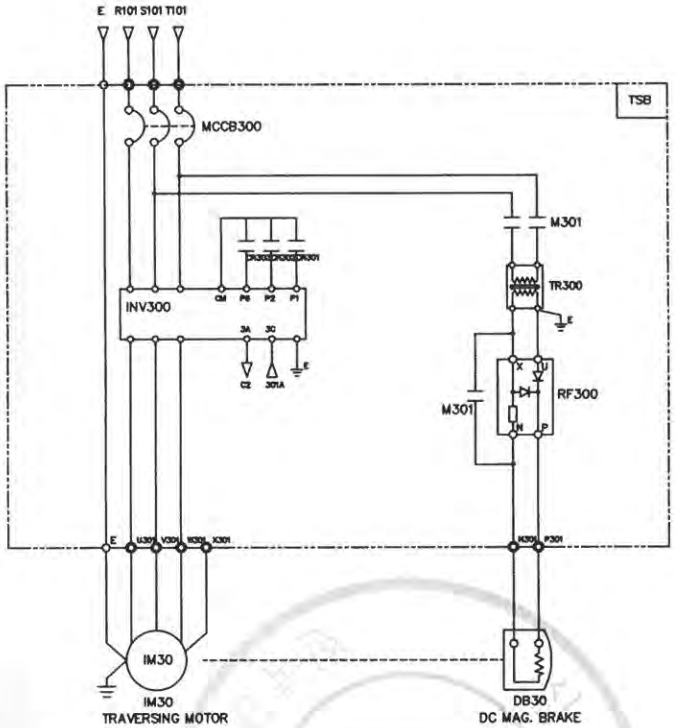

CONTROL CIRCUIT DIAGRAM

BRAKE	EAST	WEST	HIGH SPEED

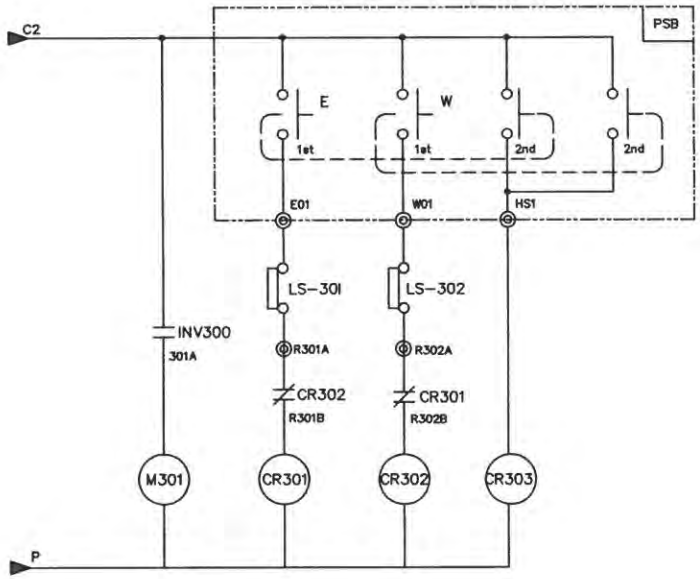

SPECIFICATION / SYMBOLS / DESCRIPTION	TRAVERSING POWER	TRAVERSING MOTOR	DC MAG' BRAKE	NO FUSE BREAKER	TRANSFORMER	BRAKE MAGNET	CONTROL RELAY	INVERTER	SILICON RECTIFIER	LIMIT S/W
		IM 30	DB30	MCCB300	TR 300	M301	CR301,302,303	INV300	RF300	LS-301,302
	AC 3PH 220V 60Hz	0.75KW x 4P	DC 100V	ABS33c/10AT	–	DMC22b	MINI 4a4b(Coil AC110V)	SV008iG5A-2	SR-30	KG-L001
	AC 3PH 380(440,460,480)V 60Hz	0.75KW x 4P	DC 100V	ABS33c/5AT	380(440,460,480)/220V,200VA	DMC22b	MINI 4a4b(Coil AC110V)	SV008iG5A-4	SR-30	KG-L001
	AC 3PH 220V 60Hz	0.5KW x 6P	DC 100V	ABS33c/10AT	–	DMC22b	MINI 4a4b(Coil AC110V)	SV008iG5A-2	SR-30	KG-L001
	AC 3PH 380(440,460,480)V 60Hz	0.5KW x 6P	DC 100V	ABS33c/5AT	380(440,460,480)/220V,200VA	DMC22b	MINI 4a4b(Coil AC110V)	SV008iG5A-4	SR-30	KG-L001
SELECTION / MAKER	KUK DONG HOIST							LS	ASECO	KG-AUTO

REV	DATE	DESCRIPTION	DRAWN	CHECK	APPRVD
A	27.APR.2020	REDRAWING	K.H.Han	-	-

TITLE
TRAVERSING CIRCUIT DIAGRAM
(INVERTER CONTROL)
KDC10-D

CUSTOMER

극동호이스트 주식회사
KUKDONG HOIST CO., LTD.

DESIGN	SCALE	SHT. NO.	ORDER NO.

DWG. NO. KDC10D-EI001

192.168.11.51 / 2020-06-11 16:27:42

불법복제 및 배포금지

TRAVERSING MOTION

POWER CIRCUIT DIAGRAM

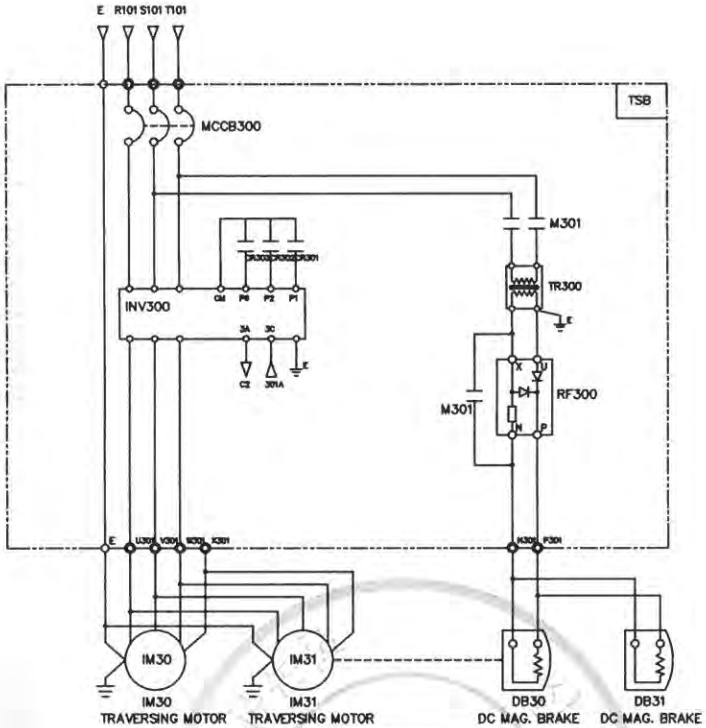

CONTROL CIRCUIT DIAGRAM

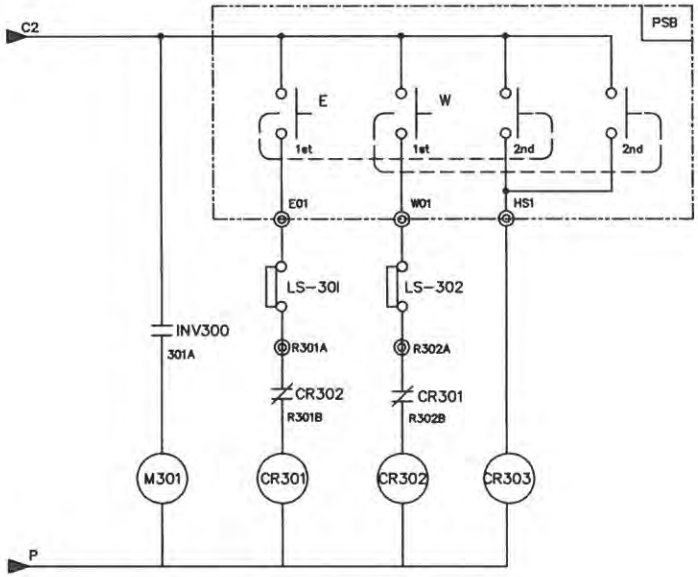

SPECIFICATION / SYMBOLS / DESCRIPTION	TRAVERSING POWER	TRAVERSING MOTOR	DC.MAG' BRAKE	NO FUSE BREAKER	TRANSFORMER	BRAKE MAGNET	CONTROL RELAY	INVERTER	SILICON RECTIFIER	LIMIT S/W
		IM 30,31	DB30,31	MCCB300	TR 300	M301	CR301,302,303	INV300	RF300	LS-301,302
	AC 3PH 220V 60Hz	0.75KW x 4P	DC 100V	ABS33c/15AT	-	DMC22b	MINI 4a4b(Coil AC110V)	SV015iG5A-2	SR-30	KG-L001
	AC 3PH 380(440,460,480)V 60Hz	0.75KW x 4P	DC 100V	ABS33c/10AT	380(440,460,480)/220V,300VA	DMC22b	MINI 4a4b(Coil AC110V)	SV015iG5A-4	SR-30	KG-L001
	AC 3PH 220V 60Hz	0.5KW x 6P	DC 100V	ABS33c/15AT	-	DMC22b	MINI 4a4b(Coil AC110V)	SV015iG5A-2	SR-30	KG-L001
	AC 3PH 380(440,460,480)V 60Hz	0.5KW x 6P	DC 100V	ABS33c/10AT	380(440,460,480)/220V,300VA	DMC22b	MINI 4a4b(Coil AC110V)	SV015iG5A-4	SR-30	KG-L001
SELECTION / MAKER	KUK DONG HOIST							LS	ASECO	KG-AUTO

REV	DATE	DESCRIPTION	DRAWN	CHECK	APPRVD
A	27.APR.2020	REDRAWING	K.H.Han	-	-

TITLE
TRAVERSING CIRCUIT DIAGRAM
(INVERTER CONTROL)
KDC10-D

CUSTOMER

극동호이스트 주식회사
KUKDONG HOIST CO., LTD.

DESIGN	SCALE	SHT. NO.	ORDER NO.

DWG. NO. KDC10D-EI002

192.168.11.51 / 2020-06-11 16:27:42
불법복제 및 배포금지

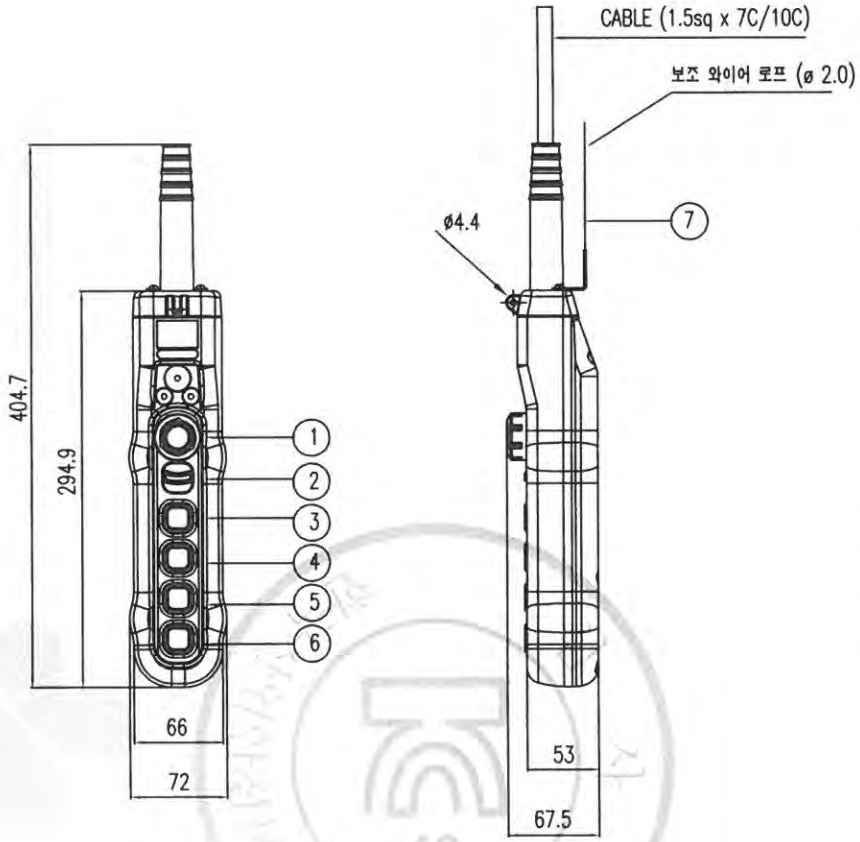

구분 / 색상	조작버튼	표시등
적색	비상	비상
황색	비정상	비정상
녹색	정상	정상
청색	의무	의무
흰색,회색-흑색	지정된의미없음	기타

* MATERIAL : POLYCARBOBATE(PLASTIC)
* BODY COLOR : YELLOW, BLACK
* IP : 55 이상

NO	SYMBOL	TYPE	SPEC.	COLOR
1	E.B.S	PUSH LOCK TURN RESET TYPE	250VAC x 6A	RED
2	SPARE			BLACK
3	상	1PUSH BUTTON 1STEP (2STEP)		
4	하	1PUSH BUTTON 1STEP (2STEP)		
5	동(전)	1PUSH BUTTON 1STEP (2STEP)		
6	서(후)	1PUSH BUTTON 1STEP (2STEP)		
7	보조 와이어	ø 2.0		

REV	DATE	DESCRIPTION	DRAWN	CHECK	APPRVD
A	05.AUG.2016	REDRAWING	K.H.Han	-	-

TITLE
PENDANT PUSH BUTTON SWITCH
LAY OUT

CUSTOMER

극동호이스트 주식회사
KUKDONG HOIST CO., LTD.

DESIGN	SCALE	SHT. NO.	ORDER NO.

DWG. NO.

불법복제 및 배포금지
192.168.11.51 / 2020-06-11 16:27:42

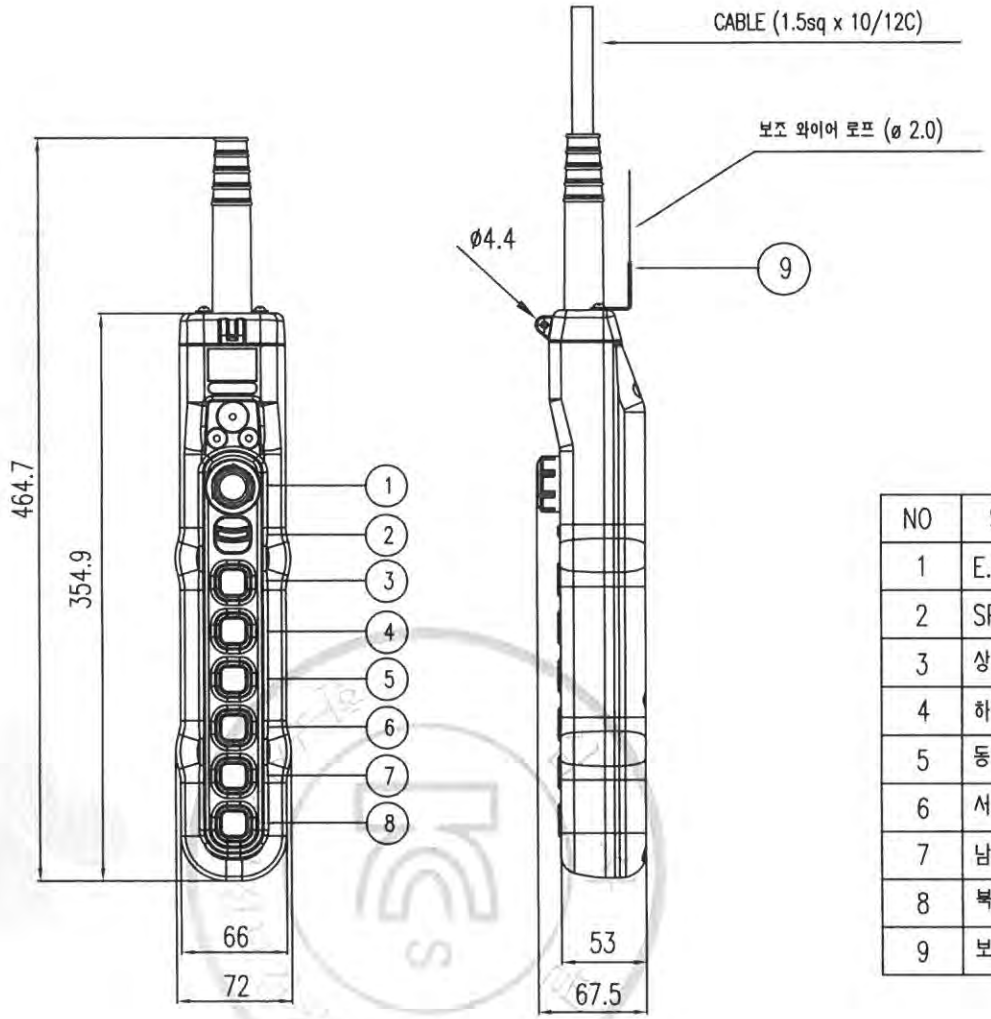

구분 / 색상	조작버튼	표시등
적색	비상	비상
황색	비정상	비정상
녹색	정상	정상
청색	의무	의무
흰색,회색-흑색	지정된의미없음	기타

* MATERIAL : POLYCARBOBATE(PLASTIC)
* BODY COLOR : YELLOW, BLACK
* IP : 55 이상

NO	SYMBOL	TYPE	SPEC.	COLOR
1	E.B.S	PUSH LOCK TURN RESET TYPE	250VAC x 6A	RED
2	SPARE			BLACK
3	상	1PUSH BUTTON 1STEP (2STEP)		
4	하	1PUSH BUTTON 1STEP (2STEP)		
5	동 (좌)	1PUSH BUTTON 1STEP (2STEP)		
6	서 (우)	1PUSH BUTTON 1STEP (2STEP)		
7	남 (전)	1PUSH BUTTON 1STEP (2STEP)		
8	북 (후)	1PUSH BUTTON 1STEP (2STEP)		
9	보조 WIRE	ø 2.0		

REV	DATE	DESCRIPTION	DRAWN	CHECK	APPRVD
	05.AUG.2016	REDRAWING	K.H.Han	-	-

TITLE
PENDANT PUSH BUTTON SWITCH
LAY OUT

CUSTOMER

극동호이스트 주식회사
KUKDONG HOIST CO., LTD.

DESIGN	SCALE	SHT. NO.	ORDER NO.

DWG. NO.

192.168.11.51 / 2020-06-11 16:27:42
불법복제 및 배포금지

불법복제 및 배포금지

Ⅳ. 참고자료

192.168.11.51 / 2020-06-11 16:27:42

LOAD LIMITER 권고 SETTING치

* POWER SOURCE : AC 3¢ 220V 60Hz

극동호이스트(주)

HOIST	MOTOR 용량	LOAD LIMITER 권고 SETTING치			LOAD CURRENT		C.T MODEL	연결단자 NO	C.T 용량	REMARK
		LOAD CURRENT	ADJ START TIME	SHOCK TIME	100%	110%				
C1 TON	2.4KW x 4P	110%	1 SEC	1 SEC	10.0 A	11.0 A	CT-2	K-K1, L-L1	5 V.A	
	0.4KW x 4P	110%	1 SEC	1 SEC	2.7 A	3.0 A	CT-1	K-K1, L-L1	5 V.A	
C2 TON	3.7KW x 4P	110%	1 SEC	1 SEC	16.0 A	17.6 A	CT-2	K-K1, L-L1	5 V.A	
	0.4KW x 4P	110%	1 SEC	1 SEC	2.7 A	3.0 A	CT-1	K-K1, L-L1	5 V.A	
C2.8 TON	5.0KW x 4P	110%	1 SEC	1 SEC	22.8 A	25.1 A	CT-2	K-K1, L-L1	5 V.A	
	1.5KW x 4P	110%	1 SEC	1 SEC	7.3 A	8.0 A	CT-1	K-K1, L-L1	5 V.A	
C3 TON	5.5KW x 4P	110%	1 SEC	1 SEC	22.8 A	25.1 A	CT-2	K-K1, L-L1	5 V.A	
	1.5KW x 4P	110%	1 SEC	1 SEC	7.3 A	8.0 A	CT-1	K-K1, L-L1	5 V.A	
C5 TON	5.5KW x 6P	110%	1 SEC	1 SEC	28.2 A	31.0 A	CT-2	K-K1, L-L1	5 V.A	
	1.0KW x 6P	110%	1 SEC	1 SEC	6.7 A	7.4 A	CT-1	K-K1, L-L1	5 V.A	
C7.5 TON	5.5KW x 6P	110%	1 SEC	1 SEC	28.2 A	31.0 A	CT-2	K-K1, L-L1	5 V.A	
	1.0KW x 6P	110%	1 SEC	1 SEC	6.7 A	7.4 A	CT-1	K-K1, L-L1	5 V.A	
C10 TON	9.0KW x 8P	110%	1 SEC	1 SEC	45.0 A	49.5 A	CT-2	K-K1, L-L1	5 V.A	
	1.1KW x 8P	110%	1 SEC	1 SEC	8.0 A	8.8 A	CT-2	K-K1, L-L1	5 V.A	

NOTE

1. 상기 TABLE의 수치는 권고 SETTING 수치이며 MOTOR의 특성 및 현장 조건에 따라 변경 가능함.

192.168.11.51 / 2020-06-11 16:27:42

불법복제 및 배포금지

LOAD LIMITER 권고 SETTING치

* POWER SOURCE : AC 3¢ 380V 60Hz

극동호이스트(주)

HOIST	MOTOR 용량	LOAD LIMITER 권고 SETTING치			LOAD CURRENT		C.T MODEL	연결단자 NO	C.T 용량	REMARK
		LOAD CURRENT	ADJ START TIME	SHOCK TIME	100%	110%				
C1 TON	2.4KW x 4P	110%	1 SEC	1 SEC	5.8 A	6.4 A	CT-2	K-K1, L-L1	5 V.A	
	0.4KW x 4P	110%	1 SEC	1 SEC	1.6 A	1.8 A	CT-1	K-K1, L-L1	5 V.A	
C2 TON	3.7KW x 4P	110%	1 SEC	1 SEC	9.3 A	10.2 A	CT-2	K-K1, L-L1	5 V.A	
	0.4KW x 4P	110%	1 SEC	1 SEC	1.6 A	1.8 A	CT-1	K-K1, L-L1	5 V.A	
C2.8 TON	5.0KW x 4P	110%	1 SEC	1 SEC	12.2 A	13.4 A	CT-2	K-K1, L-L1	5 V.A	
	1.5KW x 4P	110%	1 SEC	1 SEC	4.2 A	4.6 A	CT-1	K-K1, L-L1	5 V.A	
C3 TON	5.5KW x 4P	110%	1 SEC	1 SEC	12.2 A	13.4 A	CT-2	K-K1, L-L1	5 V.A	
	1.5KW x 4P	110%	1 SEC	1 SEC	4.2 A	4.6 A	CT-1	K-K1, L-L1	5 V.A	
C5 TON	5.5KW x 6P	110%	1 SEC	1 SEC	16.3 A	17.9 A	CT-2	K-K1, L-L1	5 V.A	
	1.0KW x 6P	110%	1 SEC	1 SEC	3.9 A	4.3 A	CT-1	K-K1, L-L1	5 V.A	
C7.5 TON	5.5KW x 6P	110%	1 SEC	1 SEC	16.3 A	17.9 A	CT-2	K-K1, L-L1	5 V.A	
	1.0KW x 6P	110%	1 SEC	1 SEC	3.9 A	4.3 A	CT-1	K-K1, L-L1	5 V.A	
C10 TON	9.0KW x 8P	110%	1 SEC	1 SEC	26.0 A	28.6 A	CT-2	K-K1, L-L1	5 V.A	
	1.1KW x 8P	110%	1 SEC	1 SEC	4.6 A	5.1 A	CT-2	K-K1, L-L1	5 V.A	

NOTE

1. 상기 TABLE의 수치는 권고 SETTING 수치이며 MOTOR의 특성 및 현장 조건에 따라 변경 가능함.

192.168.11.51 / 2020-06-11 16:27:42

무단복제 및 배포금지

LOAD LIMITER 권고 SETTING치

* POWER SOURCE : AC 3¢ 440V 60Hz

극동호이스트(주)

HOIST	MOTOR 용량	LOAD LIMITER 권고 SETTING치			LOAD CURRENT		C.T MODEL	연결단자 NO	C.T 용량	REMARK
		LOAD CURRENT	ADJ START TIME	SHOCK TIME	100%	110%				
C1 TON	2.4KW x 4P	110%	1 SEC	1 SEC	5.0 A	5.5 A	CT-2	K-K1, L-L1	5 V.A	
	0.4KW x 4P	110%	1 SEC	1 SEC	1.4 A	1.5 A	CT-1	K-K1, L-L1	5 V.A	
C2 TON	3.7KW x 4P	110%	1 SEC	1 SEC	8.0 A	8.8 A	CT-2	K-K1, L-L1	5 V.A	
	0.4KW x 4P	110%	1 SEC	1 SEC	1.4 A	1.5 A	CT-1	K-K1, L-L1	5 V.A	
C2.8 TON	5.0KW x 4P	110%	1 SEC	1 SEC	10.5 A	11.6 A	CT-2	K-K1, L-L1	5 V.A	
	1.5KW x 4P	110%	1 SEC	1 SEC	3.7 A	4.1 A	CT-1	K-K1, L-L1	5 V.A	
C3 TON	5.5KW x 4P	110%	1 SEC	1 SEC	10.5 A	11.6 A	CT-2	K-K1, L-L1	5 V.A	
	1.5KW x 4P	110%	1 SEC	1 SEC	3.7 A	4.1 A	CT-1	K-K1, L-L1	5 V.A	
C5 TON	5.5KW x 6P	110%	1 SEC	1 SEC	14.1 A	15.5 A	CT-2	K-K1, L-L1	5 V.A	
	1.0KW x 6P	110%	1 SEC	1 SEC	3.3 A	3.6 A	CT-1	K-K1, L-L1	5 V.A	
C7.5 TON	5.5KW x 6P	110%	1 SEC	1 SEC	14.1 A	15.5 A	CT-2	K-K1, L-L1	5 V.A	
	1.0KW x 6P	110%	1 SEC	1 SEC	3.3 A	3.6 A	CT-1	K-K1, L-L1	5 V.A	
C10 TON	9.0KW x 8P	110%	1 SEC	1 SEC	22.5 A	24.8 A	CT-2	K-K1, L-L1	5 V.A	
	1.1KW x 8P	110%	1 SEC	1 SEC	4.0 A	4.4 A	CT-1	K-K1, L-L1	5 V.A	

NOTE

1. 상기 TABLE의 수치는 권고 SETTING 수치이며 MOTOR의 특성 및 현장 조건에 따라 변경 가능함.

192.168.11.51 / 2020-06-11 16:27:42

무단복제 및 배포금지

LOAD LIMITER 권고 SETTING치

* POWER SOURCE : AC 3¢ 460V 60Hz

극동호이스트(주)

HOIST	MOTOR 용량	LOAD LIMITER 권고 SETTING치			LOAD CURRENT		C.T MODEL	연결단자 NO	C.T 용량	REMARK
		LOAD CURRENT	ADJ START TIME	SHOCK TIME	100%	110%				
C1 TON	2.4KW x 4P	110%	1 SEC	1 SEC	4.8 A	5.3 A	CT-2	K-K1, L-L1	5 V.A	
	0.4KW x 4P	110%	1 SEC	1 SEC	1.4 A	1.5 A	CT-1	K-K1, L-L1	5 V.A	
C2 TON	3.7KW x 4P	110%	1 SEC	1 SEC	7.7 A	8.5 A	CT-2	K-K1, L-L1	5 V.A	
	0.4KW x 4P	110%	1 SEC	1 SEC	1.4 A	1.5 A	CT-1	K-K1, L-L1	5 V.A	
C2.8 TON	5.0KW x 4P	110%	1 SEC	1 SEC	10.0 A	11.0 A	CT-2	K-K1, L-L1	5 V.A	
	1.5KW x 4P	110%	1 SEC	1 SEC	3.5 A	3.9 A	CT-1	K-K1, L-L1	5 V.A	
C3 TON	5.5KW x 4P	110%	1 SEC	1 SEC	10.0 A	11.0 A	CT-2	K-K1, L-L1	5 V.A	
	1.5KW x 4P	110%	1 SEC	1 SEC	3.5 A	3.9 A	CT-1	K-K1, L-L1	5 V.A	
C5 TON	5.5KW x 6P	110%	1 SEC	1 SEC	13.5 A	14.9 A	CT-2	K-K1, L-L1	5 V.A	
	1.0KW x 6P	110%	1 SEC	1 SEC	3.2 A	3.5 A	CT-1	K-K1, L-L1	5 V.A	
C7.5 TON	5.5KW x 6P	110%	1 SEC	1 SEC	13.5 A	14.9 A	CT-2	K-K1, L-L1	5 V.A	
	1.0KW x 6P	110%	1 SEC	1 SEC	3.2 A	3.5 A	CT-1	K-K1, L-L1	5 V.A	
C10 TON	9.0KW x 8P	110%	1 SEC	1 SEC	21.5 A	23.7 A	CT-2	K-K1, L-L1	5 V.A	
	1.1KW x 8P	110%	1 SEC	1 SEC	3.7 A	4.1 A	CT-1	K-K1, L-L1	5 V.A	

NOTE

1. 상기 TABLE의 수치는 권고 SETTING 수치이며 MOTOR의 특성 및 현장 조건에 따라 변경 가능함.

192.168.11.51 / 2020-06-11 16:27:42

불법복제 및 배포금지

LOAD LIMITER 권고 SETTING치

* POWER SOURCE : AC 3¢ 480V 60Hz

극동호이스트(주)

HOIST	MOTOR 용량	LOAD LIMITER 권고 SETTING치			LOAD CURRENT		C.T MODEL	연결단자 NO	C.T 용량	REMARK
		LOAD CURRENT	ADJ START TIME	SHOCK TIME	100%	110%				
C1 TON	2.4KW x 4P	110%	1 SEC	1 SEC	4.6 A	5.1 A	CT-2	K-K1, L-L1	5 V.A	
	0.4KW x 4P	110%	1 SEC	1 SEC	1.4 A	1.5 A	CT-1	K-K1, L-L1	5 V.A	
C2 TON	3.7KW x 4P	110%	1 SEC	1 SEC	7.3 A	8.0 A	CT-2	K-K1, L-L1	5 V.A	
	0.4KW x 4P	110%	1 SEC	1 SEC	1.4 A	1.5 A	CT-1	K-K1, L-L1	5 V.A	
C2.8 TON	5.0KW x 4P	110%	1 SEC	1 SEC	9.6 A	10.6 A	CT-2	K-K1, L-L1	5 V.A	
	1.5KW x 4P	110%	1 SEC	1 SEC	3.4 A	3.7 A	CT-1	K-K1, L-L1	5 V.A	
C3 TON	5.5KW x 4P	110%	1 SEC	1 SEC	9.6 A	10.6 A	CT-2	K-K1, L-L1	5 V.A	
	1.5KW x 4P	110%	1 SEC	1 SEC	3.4 A	3.7 A	CT-1	K-K1, L-L1	5 V.A	
C5 TON	5.5KW x 6P	110%	1 SEC	1 SEC	12.9 A	14.2 A	CT-2	K-K1, L-L1	5 V.A	
	1.0KW x 6P	110%	1 SEC	1 SEC	3.1 A	3.4 A	CT-1	K-K1, L-L1	5 V.A	
C7.5 TON	5.5KW x 6P	110%	1 SEC	1 SEC	12.9 A	14.2 A	CT-2	K-K1, L-L1	5 V.A	
	1.0KW x 6P	110%	1 SEC	1 SEC	3.1 A	3.4 A	CT-1	K-K1, L-L1	5 V.A	
C10 TON	9.0KW x 8P	110%	1 SEC	1 SEC	20.6 A	22.7 A	CT-2	K-K1, L-L1	5 V.A	
	1.1KW x 8P	110%	1 SEC	1 SEC	3.6 A	4.0 A	CT-1	K-K1, L-L1	5 V.A	

NOTE

1. 상기 TABLE의 수치는 권고 SETTING 수치이며 MOTOR의 특성 및 현장 조건에 따라 변경 가능함.

192.168.11.51 / 2020-06-11 16:27:42

무단복제 및 배포금지

E.O.C.R 권고 SETTING치

* POWER SOURCE : AC 3¢ 220V 60Hz

극동호이스트(주)

HOIST	MOTOR 용량	MOTOR 정격 전류	DRIVE TYPE	E.O.C.R TYPE	권고 SETTING 치			REMARK
					DELAY TIME	OPERATION TIME	CURRENT	
C1 TON	2.4KW x 4P	10.0 A	1 DRAVE	SS-30	3 SEC	1 SEC	11.0 A	
	0.4KW x 4P	2.7 A	1 DRAVE	SS-05	3 SEC	1 SEC	3.0 A	
C2 TON	3.7KW x 4P	16.0 A	1 DRAVE	SS-30	3 SEC	1 SEC	17.6 A	
	0.4KW x 4P	2.7 A	1 DRAVE	SS-05	3 SEC	1 SEC	3.0 A	
C2.8 TON	5.0KW x 4P	22.8 A	1 DRAVE	SS-30	3 SEC	1 SEC	25.1 A	
	1.5KW x 4P	7.3 A	1 DRAVE	SS-30	3 SEC	1 SEC	8.0 A	
C3 TON	5.5KW x 4P	22.8 A	1 DRAVE	SS-30	3 SEC	1 SEC	25.1 A	
	1.5KW x 4P	7.3 A	1 DRAVE	SS-30	3 SEC	1 SEC	8.0 A	
C5 TON	5.5KW x 6P	28.2 A	1 DRAVE	SS-30	3 SEC	1 SEC	31.0 A	
	1.0KW x 6P	6.7 A	1 DRAVE	SS-30	3 SEC	1 SEC	7.4 A	
C7.5 TON	5.5KW x 6P	28.2 A	1 DRAVE	SS-30	3 SEC	1 SEC	31.0 A	
	1.0KW x 6P	6.7 A	1 DRAVE	SS-30	3 SEC	1 SEC	7.4 A	
C10 TON	9.0KW x 8P	45.0 A	1 DRAVE	SS-60	3 SEC	1 SEC	49.5 A	
	1.1KW x 8P	8.0 A	1 DRAVE	SS-30	3 SEC	1 SEC	8.8 A	

NOTE

1. 상기 TABLE의 수치는 권고 SETTING 수치이며 MOTOR의 특성 및 현장 조건에 따라 변경 가능함.

불법복제 및 배포금지

192.168.11.51 / 2020-06-11 16:27:42

E.O.C.R 권고 SETTING치

* POWER SOURCE : AC 3¢ 380V 60Hz

극동호이스트(주)

HOIST	MOTOR 용량	MOTOR 정격 전류	DRIVE TYPE	E.O.C.R TYPE	권고 SETTING 치			REMARK
					DELAY TIME	OPERATION TIME	CURRENT	
C1 TON	2.4KW x 4P	5.8 A	1 DRAVE	SS-30	3 SEC	1 SEC	6.4 A	
	0.4KW x 4P	1.6 A	1 DRAVE	SS-05	3 SEC	1 SEC	1.8 A	
C2 TON	3.7KW x 4P	9.3 A	1 DRAVE	SS-30	3 SEC	1 SEC	10.2 A	
	0.4KW x 4P	1.6 A	1 DRAVE	SS-05	3 SEC	1 SEC	1.8 A	
C2.8 TON	5.0KW x 4P	12.2 A	1 DRAVE	SS-30	3 SEC	1 SEC	13.4 A	
	1.5KW x 4P	4.2 A	1 DRAVE	SS-05	3 SEC	1 SEC	4.6 A	
C3 TON	5.5KW x 4P	12.2 A	1 DRAVE	SS-30	3 SEC	1 SEC	13.4 A	
	1.5KW x 4P	4.2 A	1 DRAVE	SS-05	3 SEC	1 SEC	4.6 A	
C5 TON	5.5KW x 6P	16.3 A	1 DRAVE	SS-30	3 SEC	1 SEC	17.9 A	
	1.0KW x 6P	3.9 A	1 DRAVE	SS-05	3 SEC	1 SEC	4.3 A	
C7.5 TON	5.5KW x 6P	16.3 A	1 DRAVE	SS-30	3 SEC	1 SEC	17.9 A	
	1.0KW x 6P	3.9 A	1 DRAVE	SS-05	3 SEC	1 SEC	4.3 A	
C10 TON	9.0KW x 8P	26.0 A	1 DRAVE	SS-30	3 SEC	1 SEC	28.6 A	
	1.1KW x 8P	4.6 A	1 DRAVE	SS-05	3 SEC	1 SEC	5.1 A	

NOTE

1. 상기 TABLE의 수치는 권고 SETTING 수치이며 MOTOR의 특성 및 현장 조건에 따라 변경 가능함.

무단배포 및 재생금지

192.168.11.51 / 2020-06-11 16:27:42

E.O.C.R 권고 SETTING치

* POWER SOURCE : AC 3¢ 440V 60Hz

극동호이스트(주)

HOIST	MOTOR 용량	MOTOR 정격 전류	DRIVE TYPE	E.O.C.R TYPE	권고 SETTING 치			REMARK
					DELAY TIME	OPERATION TIME	CURRENT	
C1 TON	2.4KW x 4P	5.0 A	1 DRAVE	SS-30	3 SEC	1 SEC	5.5 A	
	0.4KW x 4P	1.4 A	1 DRAVE	SS-05	3 SEC	1 SEC	1.5 A	
C2 TON	3.7KW x 4P	8.0 A	1 DRAVE	SS-30	3 SEC	1 SEC	8.8 A	
	0.4KW x 4P	1.4 A	1 DRAVE	SS-05	3 SEC	1 SEC	1.5 A	
C2.8 TON	5.0KW x 4P	10.5 A	1 DRAVE	SS-30	3 SEC	1 SEC	11.6 A	
	1.5KW x 4P	3.7 A	1 DRAVE	SS-05	3 SEC	1 SEC	4.1 A	
C3 TON	5.5KW x 4P	10.5 A	1 DRAVE	SS-30	3 SEC	1 SEC	11.6 A	
	1.5KW x 4P	3.7 A	1 DRAVE	SS-05	3 SEC	1 SEC	4.1 A	
C5 TON	5.5KW x 6P	14.1 A	1 DRAVE	SS-30	3 SEC	1 SEC	15.5 A	
	1.0KW x 6P	3.3 A	1 DRAVE	SS-05	3 SEC	1 SEC	3.6 A	
C7.5 TON	5.5KW x 6P	14.1 A	1 DRAVE	SS-30	3 SEC	1 SEC	15.5 A	
	1.0KW x 6P	3.3 A	1 DRAVE	SS-05	3 SEC	1 SEC	3.6 A	
C10 TON	9.0KW x 8P	22.5 A	1 DRAVE	SS-30	3 SEC	1 SEC	24.8 A	
	1.1KW x 8P	4.0 A	1 DRAVE	SS-05	3 SEC	1 SEC	4.4 A	

NOTE

1. 상기 TABLE의 수치는 권고 SETTING 수치이며 MOTOR의 특성 및 현장 조건에 따라 변경 가능함.

192.168.11.51 / 2020-06-11 16:27:42

무단배포 및 복제 금지

E.O.C.R 권고 SETTING치

* POWER SOURCE : AC 3¢ 460V 60Hz

극동호이스트(주)

HOIST	MOTOR 용량	MOTOR 정격 전류	DRIVE TYPE	E.O.C.R TYPE	권고 SETTING 치			REMARK
					DELAY TIME	OPERATION TIME	CURRENT	
C1 TON	2.4KW x 4P	4.8 A	1 DRAVE	SS-30	3 SEC	1 SEC	5.3 A	
	0.4KW x 4P	1.4 A	1 DRAVE	SS-05	3 SEC	1 SEC	1.5 A	
C2 TON	3.7KW x 4P	7.7 A	1 DRAVE	SS-30	3 SEC	1 SEC	8.5 A	
	0.4KW x 4P	1.4 A	1 DRAVE	SS-05	3 SEC	1 SEC	1.5 A	
C2.8 TON	5.0KW x 4P	10.0 A	1 DRAVE	SS-30	3 SEC	1 SEC	11.0 A	
	1.5KW x 4P	3.5 A	1 DRAVE	SS-05	3 SEC	1 SEC	3.9 A	
C3 TON	5.5KW x 4P	10.0 A	1 DRAVE	SS-30	3 SEC	1 SEC	11.0 A	
	1.5KW x 4P	3.5 A	1 DRAVE	SS-05	3 SEC	1 SEC	3.9 A	
C5 TON	5.5KW x 6P	13.5 A	1 DRAVE	SS-30	3 SEC	1 SEC	14.9 A	
	1.0KW x 6P	3.2 A	1 DRAVE	SS-05	3 SEC	1 SEC	3.5 A	
C7.5 TON	5.5KW x 6P	13.5 A	1 DRAVE	SS-30	3 SEC	1 SEC	14.9 A	
	1.0KW x 6P	3.2 A	1 DRAVE	SS-05	3 SEC	1 SEC	3.5 A	
C10 TON	9.0KW x 8P	21.5 A	1 DRAVE	SS-30	3 SEC	1 SEC	23.7 A	
	1.1KW x 8P	3.7 A	1 DRAVE	SS-05	3 SEC	1 SEC	4.1 A	

NOTE

1. 상기 TABLE의 수치는 권고 SETTING 수치이며 MOTOR의 특성 및 현장 조건에 따라 변경 가능함.

192.168.11.51 / 2020-06-11 16:27:42

불법복제 및 배포금지

E.O.C.R 권고 SETTING치

* POWER SOURCE : AC 3¢ 480V 60Hz

극동호이스트(주)

HOIST	MOTOR 용량	MOTOR 정격 전류	DRIVE TYPE	E.O.C.R TYPE	권고 SETTING 치			REMARK
					DELAY TIME	OPERATION TIME	CURRENT	
C1 TON	2.4KW x 4P	4.6 A	1 DRAVE	SS-30	3 SEC	1 SEC	5.1 A	
	0.4KW x 4P	1.4 A	1 DRAVE	SS-05	3 SEC	1 SEC	1.5 A	
C2 TON	3.7KW x 4P	7.3 A	1 DRAVE	SS-30	3 SEC	1 SEC	8.0 A	
	0.4KW x 4P	1.4 A	1 DRAVE	SS-05	3 SEC	1 SEC	1.5 A	
C2.8 TON	5.0KW x 4P	9.6 A	1 DRAVE	SS-30	3 SEC	1 SEC	10.6 A	
	1.5KW x 4P	3.4 A	1 DRAVE	SS-05	3 SEC	1 SEC	3.7 A	
C3 TON	5.5KW x 4P	9.6 A	1 DRAVE	SS-30	3 SEC	1 SEC	10.6 A	
	1.5KW x 4P	3.4 A	1 DRAVE	SS-05	3 SEC	1 SEC	3.7 A	
C5 TON	5.5KW x 6P	12.9 A	1 DRAVE	SS-30	3 SEC	1 SEC	14.2 A	
	1.0KW x 6P	3.1 A	1 DRAVE	SS-05	3 SEC	1 SEC	3.4 A	
C7.5 TON	5.5KW x 6P	12.9 A	1 DRAVE	SS-30	3 SEC	1 SEC	14.2 A	
	1.0KW x 6P	3.1 A	1 DRAVE	SS-05	3 SEC	1 SEC	3.4 A	
C10 TON	9.0KW x 8P	20.6 A	1 DRAVE	SS-30	3 SEC	1 SEC	22.7 A	
	1.1KW x 8P	3.6 A	1 DRAVE	SS-05	3 SEC	1 SEC	4.0 A	

NOTE

1. 상기 TABLE의 수치는 권고 SETTING 수치이며 MOTOR의 특성 및 현장 조건에 따라 변경 가능함.

무단배포 및 재사용금지

192.168.11.51 / 2020-06-11 16:27:42

E.O.C.R 권고 SETTING 치

* POWER SOURCE : AC3¢ 220V 60Hz

극동호이스트 (주)

MOTOR 용량	MOTOR 정격 전류	DRIVE TYPE	E.O.C.R TYPE	권고 SETTING 치			REMARK
				DELAY TIME	OPERATION TIME	CURRENT	
0.2KW x 6P	2.1 A	1 DRIVE	SS - 05	3 SEC	1 SEC	2.3 A	
		2DRIVE	SS - 05	3 SEC	1 SEC	4.6 A	
0.4KW x 4P	2.7 A	1 DRIVE	SS - 05	3 SEC	1 SEC	3.0 A	
		2DRIVE	SS - 30	3 SEC	1 SEC	5.9 A	
0.5KW x 6P	3.4 A	1 DRIVE	SS - 05	3 SEC	1 SEC	3.7 A	
		2DRIVE	SS - 30	3 SEC	1 SEC	7.5 A	
0.75KW x 4P	4.1 A	1 DRIVE	SS - 05	3 SEC	1 SEC	4.5 A	
		2DRIVE	SS - 30	3 SEC	1 SEC	9.0 A	
1.0KW x 6P	6.8 A	1 DRIVE	SS - 30	3 SEC	1 SEC	7.5 A	
		2DRIVE	SS - 30	3 SEC	1 SEC	15.0 A	
1.5KW x 4P	7.4 A	1 DRIVE	SS - 30	3 SEC	1 SEC	8.1 A	
		2DRIVE	SS - 30	3 SEC	1 SEC	16.3 A	
1.5KW x 6P	7.6 A	1 DRIVE	SS - 30	3 SEC	1 SEC	8.4 A	
		2DRIVE	SS - 30	3 SEC	1 SEC	16.7 A	
2.2KW x 4P	10.0 A	1 DRIVE	SS - 30	3 SEC	1 SEC	11.0 A	
		2 DRIVE	SS - 30	3 SEC	1 SEC	22.0 A	
0.8/0.4KW x 4/8P	4.8 A	1 DRIVE	SS - 30	3 SEC	1 SEC	5.3 A	
			SS - 05	3 SEC	1 SEC	4.7 A	
	4.3 A	2 DRIVE	SS - 30	3 SEC	1 SEC	10.6 A	
			SS - 30	3 SEC	1 SEC	9.4 A	
2.2KW x 6P	12.0 A	1 DRIVE	SS - 30	3 SEC	1 SEC	13.2 A	
		2DRIVE	SS - 30	3 SEC	1 SEC	26.4 A	
3.7KW x 4P	16.0 A	1 DRIVE	SS - 30	3 SEC	1 SEC	17.6 A	
		2DRIVE	SS - 60	3 SEC	1 SEC	35.2 A	

NOTE

1, 상기 TABLE의 수치는 권고 SETTING 수치이며 MOTOR의 특성 및 현장 조건에 따라 변경 가능함.

192.168.11.51 / 2020-06-11 16:27:42

불법복제 및 배포금지

E.O.C.R 권고 SETTING 치

* POWER SOURCE : AC3¢ 380V 60Hz

극동호이스트 (주)

MOTOR 용량	MOTOR 정격 전류	DRIVE TYPE	E.O.C.R TYPE	권고 SETTING 치			REMARK
				DELAY TIME	OPERATION TIME	CURRENT	
0.2KW x 6P	1.6 A	1 DRIVE	SS - 05	3 SEC	1 SEC	1.8 A	
		2DRIVE	SS - 05	3 SEC	1 SEC	3.5 A	
0.4KW x 4P	1.8 A	1 DRIVE	SS - 05	3 SEC	1 SEC	2.0 A	
		2DRIVE	SS - 05	3 SEC	1 SEC	4.0 A	
0.5KW x 6P	2.0 A	1 DRIVE	SS - 05	3 SEC	1 SEC	2.2 A	
		2DRIVE	SS - 05	3 SEC	1 SEC	4.4 A	
0.75KW x 4P	2.4 A	1 DRIVE	SS - 05	3 SEC	1 SEC	2.6 A	
		2DRIVE	SS - 30	3 SEC	1 SEC	5.3 A	
1.0KW x 6P	3.9 A	1 DRIVE	SS - 05	3 SEC	1 SEC	4.3 A	
		2DRIVE	SS - 30	3 SEC	1 SEC	8.6 A	
1.5KW x 4P	4.3 A	1 DRIVE	SS - 05	3 SEC	1 SEC	4.7 A	
		2DRIVE	SS - 30	3 SEC	1 SEC	9.5 A	
1.5KW x 6P	4.4 A	1 DRIVE	SS - 05	3 SEC	1 SEC	4.8 A	
		2DRIVE	SS - 30	3 SEC	1 SEC	9.7 A	
2.2KW x 4P	5.8 A	1 DRIVE	SS - 30	3 SEC	1 SEC	6.4 A	
		2 DRIVE	SS - 30	3 SEC	1 SEC	12.8 A	
0.8/0.4KW x 4/8P	2.8 A	1 DRIVE	SS - 05	3 SEC	1 SEC	3.1 A	
			SS - 05	3 SEC	1 SEC	2.9 A	
	2.6 A	2 DRIVE	SS - 30	3 SEC	1 SEC	6.1 A	
			SS - 30	3 SEC	1 SEC	5.8 A	
2.2KW x 6P	7.0 A	1 DRIVE	SS - 30	3 SEC	1 SEC	7.7 A	
		2DRIVE	SS - 30	3 SEC	1 SEC	15.4 A	
3.7KW x 4P	9.3 A	1 DRIVE	SS - 30	3 SEC	1 SEC	10.2 A	
		2DRIVE	SS - 30	3 SEC	1 SEC	20.5 A	

NOTE

1, 상기 TABLE의 수치는 권고 SETTING 수치이며 MOTOR의 특성 및 현장 조건에 따라 변경 가능함.

192.168.11.51 / 2020-06-11 16:27:42

무단배포 및 재생금지

E.O.C.R 권고 SETTING 치

* POWER SOURCE : AC3¢ 440V 60Hz

극동호이스트 (주)

MOTOR 용량	MOTOR 정격 전류	DRIVE TYPE	E.O.C.R TYPE	권고 SETTING 치			REMARK
				DELAY TIME	OPERATION TIME	CURRENT	
0.2KW x 6P	1.2 A	1 DRIVE	SS - 05	3 SEC	1 SEC	1.3 A	
		2DRIVE	SS - 05	3 SEC	1 SEC	2.6 A	
0.4KW x 4P	1.4 A	1 DRIVE	SS - 05	3 SEC	1 SEC	1.5 A	
		2DRIVE	SS - 05	3 SEC	1 SEC	3.1 A	
0.5KW x 6P	1.7 A	1 DRIVE	SS - 05	3 SEC	1 SEC	1.9 A	
		2DRIVE	SS - 05	3 SEC	1 SEC	3.7 A	
0.75KW x 4P	2.0 A	1 DRIVE	SS - 05	3 SEC	1 SEC	2.2 A	
		2DRIVE	SS - 05	3 SEC	1 SEC	4.4 A	
1.0KW x 6P	2.8 A	1 DRIVE	SS - 05	3 SEC	1 SEC	3.1 A	
		2DRIVE	SS - 30	3 SEC	1 SEC	6.2 A	
1.5KW x 4P	3.7 A	1 DRIVE	SS - 05	3 SEC	1 SEC	4.1 A	
		2DRIVE	SS - 30	3 SEC	1 SEC	8.1 A	
1.5KW x 6P	3.8 A	1 DRIVE	SS - 05	3 SEC	1 SEC	4.2 A	
		2DRIVE	SS - 30	3 SEC	1 SEC	8.4 A	
2.2KW x 4P	5.0 A	1 DRIVE	SS - 30	3 SEC	1 SEC	5.5 A	
		2 DRIVE	SS - 30	3 SEC	1 SEC	11.0 A	
0.8/0.4KW x 4/8P	2.4 A	1 DRIVE	SS - 05	3 SEC	1 SEC	2.6 A	
			SS - 05	3 SEC	1 SEC	2.5 A	
	2.3 A	2 DRIVE	SS - 30	3 SEC	1 SEC	5.3 A	
			SS - 05	3 SEC	1 SEC	5.0 A	
2.2KW x 6P	5.8 A	1 DRIVE	SS - 30	3 SEC	1 SEC	6.4 A	
		2DRIVE	SS - 30	3 SEC	1 SEC	12.8 A	
3.7KW x 4P	8.0 A	1 DRIVE	SS - 30	3 SEC	1 SEC	8.8 A	
		2DRIVE	SS - 30	3 SEC	1 SEC	17.6 A	

NOTE

1, 상기 TABLE의 수치는 권고 SETTING 수치이며 MOTOR의 특성 및 현장 조건에 따라 변경 가능함.

192.168.11.51 / 2020-06-11 16:27:42

무단배포 및 재사용금지

E.O.C.R 권고 SETTING 치

* POWER SOURCE : AC3₵ 460V 60Hz

극동호이스트 (주)

MOTOR 용량	MOTOR 정격 전류	DRIVE TYPE	E.O.C.R TYPE	권고 SETTING 치			REMARK
				DELAY TIME	OPERATION TIME	CURRENT	
0.2KW x 6P	1.2 A	1 DRIVE	SS - 05	3 SEC	1 SEC	1.3 A	
		2DRIVE	SS - 05	3 SEC	1 SEC	2.6 A	
0.4KW x 4P	1.4 A	1 DRIVE	SS - 05	3 SEC	1 SEC	1.5 A	
		2DRIVE	SS - 05	3 SEC	1 SEC	3.1 A	
0.5KW x 6P	1.7 A	1 DRIVE	SS - 05	3 SEC	1 SEC	1.9 A	
		2DRIVE	SS - 05	3 SEC	1 SEC	3.7 A	
0.75KW x 4P	2.0 A	1 DRIVE	SS - 05	3 SEC	1 SEC	2.2 A	
		2DRIVE	SS - 05	3 SEC	1 SEC	4.4 A	
1.0KW x 6P	2.8 A	1 DRIVE	SS - 05	3 SEC	1 SEC	3.1 A	
		2DRIVE	SS - 30	3 SEC	1 SEC	6.2 A	
1.5KW x 4P	3.7 A	1 DRIVE	SS - 05	3 SEC	1 SEC	4.1 A	
		2DRIVE	SS - 30	3 SEC	1 SEC	8.1 A	
1.5KW x 6P	3.8 A	1 DRIVE	SS - 05	3 SEC	1 SEC	4.2 A	
		2DRIVE	SS - 30	3 SEC	1 SEC	8.4 A	
2.2KW x 4P	5.0 A	1 DRIVE	SS - 30	3 SEC	1 SEC	5.5 A	
		2 DRIVE	SS - 30	3 SEC	1 SEC	11.0 A	
0.8/0.4KW x 4/8P	2.4 A	1 DRIVE	SS - 05	3 SEC	1 SEC	2.6 A	
			SS - 05	3 SEC	1 SEC	2.5 A	
	2.3 A	2 DRIVE	SS - 30	3 SEC	1 SEC	5.3 A	
			SS - 05	3 SEC	1 SEC	5.0 A	
2.2KW x 6P	5.8 A	1 DRIVE	SS - 30	3 SEC	1 SEC	6.4 A	
		2DRIVE	SS - 30	3 SEC	1 SEC	12.8 A	
3.7KW x 4P	8.0 A	1 DRIVE	SS - 30	3 SEC	1 SEC	8.8 A	
		2DRIVE	SS - 30	3 SEC	1 SEC	17.6 A	

NOTE

1, 상기 TABLE의 수치는 권고 SETTING 수치이며 MOTOR의 특성 및 현장 조건에 따라 변경 가능함.

192.168.11.51 / 2020-06-11 16:27:42

무단배포 및 재사용금지

E.O.C.R 권고 SETTING 치

* POWER SOURCE : AC3¢ 480V 60Hz

극동호이스트 (주)

MOTOR 용량	MOTOR 정격 전류	DRIVE TYPE	E.O.C.R TYPE	권고 SETTING 치			REMARK
				DELAY TIME	OPERATION TIME	CURRENT	
0.2KW x 6P	1.2 A	1 DRIVE	SS - 05	3 SEC	1 SEC	1.3 A	
		2DRIVE	SS - 05	3 SEC	1 SEC	2.6 A	
0.4KW x 4P	1.4 A	1 DRIVE	SS - 05	3 SEC	1 SEC	1.5 A	
		2DRIVE	SS - 05	3 SEC	1 SEC	3.1 A	
0.5KW x 6P	1.6 A	1 DRIVE	SS - 05	3 SEC	1 SEC	1.8 A	
		2DRIVE	SS - 05	3 SEC	1 SEC	3.5 A	
0.75KW x 4P	1.9 A	1 DRIVE	SS - 05	3 SEC	1 SEC	2.1 A	
		2DRIVE	SS - 05	3 SEC	1 SEC	4.2 A	
1.0KW x 6P	2.8 A	1 DRIVE	SS - 05	3 SEC	1 SEC	3.1 A	
		2DRIVE	SS - 30	3 SEC	1 SEC	6.2 A	
1.5KW x 4P	3.7 A	1 DRIVE	SS - 05	3 SEC	1 SEC	4.1 A	
		2DRIVE	SS - 30	3 SEC	1 SEC	8.1 A	
1.5KW x 6P	3.8 A	1 DRIVE	SS - 05	3 SEC	1 SEC	4.2 A	
		2DRIVE	SS - 30	3 SEC	1 SEC	8.4 A	
2.2KW x 4P	5.0 A	1 DRIVE	SS - 30	3 SEC	1 SEC	5.5 A	
		2 DRIVE	SS - 30	3 SEC	1 SEC	11.0 A	
0.8/0.4KW x 4/8P	2.4 A	1 DRIVE	SS - 05	3 SEC	1 SEC	2.6 A	
			SS - 05	3 SEC	1 SEC	2.5 A	
	2.3 A	2 DRIVE	SS - 30	3 SEC	1 SEC	5.3 A	
			SS - 05	3 SEC	1 SEC	5.0 A	
2.2KW x 6P	5.8 A	1 DRIVE	SS - 30	3 SEC	1 SEC	6.4 A	
		2DRIVE	SS - 30	3 SEC	1 SEC	12.8 A	
3.7KW x 4P	8.0 A	1 DRIVE	SS - 30	3 SEC	1 SEC	8.8 A	
		2DRIVE	SS - 30	3 SEC	1 SEC	17.6 A	

NOTE

1, 상기 TABLE의 수치는 권고 SETTING 수치이며 MOTOR의 특성 및 현장 조건에 따라 변경 가능함.

192.168.11.51 / 2020-06-11 16:27:42

불법복제 및 배포금지

불법복제 및 배포금지

DSR WIRE CORP

ORIGINAL

SALES OFFICE : 7th floor, 145, Teheran-ro, Gangnam-gu, Seoul, Korea
TEL : 82-2-3420-3500, FAX : 82-2-3420-3600, E-mail : sales@dsrcorp.com, http://www.dsrcorp.com

MILL TEST CERTIFICATE / CERTIFICATE OF INSPECTION

Certificate No : 201810-Do637-1
Reel/Coil No : 1 - 2
Purchaser : -

Date : 2018. 10. 10
P.O No : -
L/C No. : -
Invoice No : Do637-160

1. TYPE / GRADE

Construction : 6X37+FC
Diameter : 16 MM
Length : 1,000 MTRS X 2 R/L
Specification : KS D 3514

Coating : BRIGHT
Grade : 1,770
Lay : RHRL
Lubrication : A-2

2. ROPE TEST RESULTS

Items	Norminal or Specified	Actual
Diameter	16 MM	16.4 MM
Breaking Strength	145.0 KN	149 KN
Lay Length	- MM	107 MM
Preforming	Good	Good

3. WIRE TEST RESULTS

Items	Norminal or Specified	Actual
Diameter	0.72 MM	0.73 MM
Tensile Strength	1,770 N/MM2	1,833 N/MM2
Break Force	720 N	767 N
Torsion	27	40
Weight of Coating	- G/M2	- G/M2

We hereby certify that the above results are true and correct in every detail.

CHEMICAL ANALYSIS OF WIRE ROD

Charge No	Chemical Composition (%)				
	C	Si	Mn	P	S
SF 97502	0.71	0.20	0.47	0.009	0.007

Approval or Inspection Possibility

WIRE ROPE
Suncheon Factory : 15, Sandan 1-gil, Seo-myeon, Suncheon-si Jeonnam-do, Korea
Yulchon Factory : 80-21, Yulchonsandan 1-ro, Haenyong-myeon, Suncheon-si, Jeonnam-do, Korea

ISO, ISO(Yul) ISO/TS(Yul) ISO(Yul) OHSAS(Yul) JIS KSA
JIS G 3525 (KSKR 08022) JIS G 3537 (KSKR 08023) KS D 3514 (NB173※) KS D 7007 (NB174※)
ABS LLOYD'S NK KR DNV GL BV RINA CCS RS

WIRE
Suncheon 2Factory : 38, Sandan 4-gil, Seo-myeon, Suncheon-si Jeonnam-do, Korea
ISO JIS KSA
JIS G 3521 (KSKR 08020) JIS G 3522 (KSKR 08021) KS D 3510 (NB172※)

Quality Management Dept

Chief Inspector

192.168.11.51 / 2020-06-11 16:27:42

불법복제 및 배포금지

THREE PHASE INDUCTION MOTOR DATA SHEET

SCHEDULE OF TECHNICAL DATA

1. SERVICE	HOISTING
2. MANUFACTURE	극동 호이스트 (주)
3. FRAME NUMBER	160 L
4. RATED POWER	9.0 KW x 8 P
5. RATED VOLTAGE AND FREQUENCY	220 V 60 Hz
6. MOTOR TYPE	SQUIRREL CAGE ROTOR TYPE
7. SERVICE FACTOR AND RATTING	1 . 0 , 30 MIN
8. LOCATION AND INSULATION CLASS	INDOOR, OUTDOOR, B CLASS
9. DESIGN TEMPERATURE RISE(BY RESISTANCE)	80 ℃
10. FULL LOAD SPEED	825 RPM
11. FULL LOAD CURRENT	45.0 A
12. STARTING CURRENT AT RATED VOLTAGE	213 A
13. MINIMUM STARTING VOLTAGE	198 V
14. EFFICIENCY AT 100% RATED LOAD	79.5 %
15. POWER FACTOR AT 100% RATED LOAD	66.4 %
16. STARTING TORQUE	15.9 KG.M
17. SITE ALTITUDE(UNDER)	1000 M
18. ENCLOSURE & COOLING METHOD	T E N V
19. TYPE OF BEARING	PL : 6309zz OPL : 6308zz
20. MOUNTING	H O R I Z O N T A L
21. MAXIMUM AMBIENT TEMPERATURE	40 ℃
22. BEARING LUBRICATION	G R E A S E
23. STARTING METHOD	F U L L V O L T A G E

192.168.11.51 / 2020-06-11 16:27:42

불법복제 및 배포금지

THREE PHASE INDUCTION MOTOR DATA SHEET

SCHEDULE OF TECHNICAL DATA

1. SERVICE	HOISTING
2. MANUFACTURE	극동 호이스트 (주)
3. FRAME NUMBER	160 L
4. RATED POWER	9.0 KW x 8 P
5. RATED VOLTAGE AND FREQUENCY	380 V 60 Hz
6. MOTOR TYPE	SQUIRREL CAGE ROTOR TYPE
7. SERVICE FACTOR AND RATTING	1 . 0 , 30 MIN
8. LOCATION AND INSULATION CLASS	INDOOR, OUTDOOR, B CLASS
9. DESIGN TEMPERATURE RISE(BY RESISTANCE)	80 ℃
10. FULL LOAD SPEED	825 RPM
11. FULL LOAD CURRENT	26.0 A
12. STARTING CURRENT AT RATED VOLTAGE	122.9 A
13. MINIMUM STARTING VOLTAGE	342 V
14. EFFICIENCY AT 100% RATED LOAD	79.5 %
15. POWER FACTOR AT 100% RATED LOAD	66.4 %
16. STARTING TORQUE	15.9 KG.M
17. SITE ALTITUDE(UNDER)	1000 M
18. ENCLOSURE & COOLING METHOD	T E N V
19. TYPE OF BEARING	PL : 6309zz OPL : 6308zz
20. MOUNTING	H O R I Z O N T A L
21. MAXIMUM AMBIENT TEMPERATURE	40 ℃
22. BEARING LUBRICATION	G R E A S E
23. STARTING METHOD	F U L L V O L T A G E

192.168.11.51 / 2020-06-11 16:27:42

불법복제 및 배포금지

THREE PHASE INDUCTION MOTOR DATA SHEET

SCHEDULE OF TECHNICAL DATA

1. SERVICE	HOISTING
2. MANUFACTURE	극동 호이스트 (주)
3. FRAME NUMBER	160 L
4. RATED POWER	9.0 KW x 8 P
5. RATED VOLTAGE AND FREQUENCY	440 V 60 Hz
6. MOTOR TYPE	SQUIRREL CAGE ROTOR TYPE
7. SERVICE FACTOR AND RATTING	1 . 0 , 30 MIN
8. LOCATION AND INSULATION CLASS	INDOOR, OUTDOOR, B CLASS
9. DESIGN TEMPERATURE RISE(BY RESISTANCE)	80 ℃
10. FULL LOAD SPEED	825 RPM
11. FULL LOAD CURRENT	22.5 A
12. STARTING CURRENT AT RATED VOLTAGE	106.0 A
13. MINIMUM STARTING VOLTAGE	396 V
14. EFFICIENCY AT 100% RATED LOAD	79.5 %
15. POWER FACTOR AT 100% RATED LOAD	66.4 %
16. STARTING TORQUE	15.9 KG.M
17. SITE ALTITUDE(UNDER)	1000 M
18. ENCLOSURE & COOLING METHOD	T E N V
19. TYPE OF BEARING	PL : 6309zz OPL : 6308zz
20. MOUNTING	H O R I Z O N T A L
21. MAXIMUM AMBIENT TEMPERATURE	40 ℃
22. BEARING LUBRICATION	G R E A S E
23. STARTING METHOD	F U L L V O L T A G E

192.168.11.51 / 2020-06-11 16:27:42

불법복제 및 배포금지

THREE PHASE INDUCTION MOTOR DATA SHEET

SCHEDULE OF TECHNICAL DATA

1. SERVICE	HOISTING
2. MANUFACTURE	극동 호이스트 (주)
3. FRAME NUMBER	160 L
4. RATED POWER	9.0 KW x 8 P
5. RATED VOLTAGE AND FREQUENCY	460 V 60 Hz
6. MOTOR TYPE	SQUIRREL CAGE ROTOR TYPE
7. SERVICE FACTOR AND RATTING	1 . 0 , 30 MIN
8. LOCATION AND INSULATION CLASS	INDOOR, OUTDOOR, B CLASS
9. DESIGN TEMPERATURE RISE(BY RESISTANCE)	80 ℃
10. FULL LOAD SPEED	825 RPM
11. FULL LOAD CURRENT	21.5 A
12. STARTING CURRENT AT RATED VOLTAGE	102.2 A
13. MINIMUM STARTING VOLTAGE	414 V
14. EFFICIENCY AT 100% RATED LOAD	79.5 %
15. POWER FACTOR AT 100% RATED LOAD	66.4 %
16. STARTING TORQUE	15.9 KG.M
17. SITE ALTITUDE(UNDER)	1000 M
18. ENCLOSURE & COOLING METHOD	T E N V
19. TYPE OF BEARING	PL : 6309zz OPL : 6308zz
20. MOUNTING	H O R I Z O N T A L
21. MAXIMUM AMBIENT TEMPERATURE	40 ℃
22. BEARING LUBRICATION	G R E A S E
23. STARTING METHOD	F U L L V O L T A G E

192.168.11.51 / 2020-06-11 16:27:42

불법복제 및 배포금지

THREE PHASE INDUCTION MOTOR DATA SHEET

SCHEDULE OF TECHNICAL DATA

1. SERVICE	HOISTING
2. MANUFACTURE	극동 호이스트 (주)
3. FRAME NUMBER	160 L
4. RATED POWER	9.0 KW x 8 P
5. RATED VOLTAGE AND FREQUENCY	480 V 60 Hz
6. MOTOR TYPE	SQUIRREL CAGE ROTOR TYPE
7. SERVICE FACTOR AND RATTING	1 . 0 , 30 MIN
8. LOCATION AND INSULATION CLASS	INDOOR, OUTDOOR, B CLASS
9. DESIGN TEMPERATURE RISE(BY RESISTANCE)	80 ℃
10. FULL LOAD SPEED	825 RPM
11. FULL LOAD CURRENT	20.6 A
12. STARTING CURRENT AT RATED VOLTAGE	97.97 A
13. MINIMUM STARTING VOLTAGE	432 V
14. EFFICIENCY AT 100% RATED LOAD	79.5 %
15. POWER FACTOR AT 100% RATED LOAD	66.4 %
16. STARTING TORQUE	15.9 KG.M
17. SITE ALTITUDE(UNDER)	1000 M
18. ENCLOSURE & COOLING METHOD	T E N V
19. TYPE OF BEARING	PL : 6309zz OPL : 6308zz
20. MOUNTING	H O R I Z O N T A L
21. MAXIMUM AMBIENT TEMPERATURE	40 ℃
22. BEARING LUBRICATION	G R E A S E
23. STARTING METHOD	F U L L V O L T A G E

192.168.11.51 / 2020-06-11 16:27:42

불법복제 및 배포금지

THREE PHASE INDUCTION MOTOR DATA SHEET

SCHEDULE OF TECHNICAL DATA

1. SERVICE	HOISTING
2. MANUFACTURE	극동 호이스트 (주)
3. FRAME NUMBER	112 S
4. RATED POWER	1.1 KW x 8 P
5. RATED VOLTAGE AND FREQUENCY	220 V 60 Hz
6. MOTOR TYPE	SQUIRREL CAGE ROTOR TYPE
7. SERVICE FACTOR AND RATTING	1 . 0 , 30 MIN
8. LOCATION AND INSULATION CLASS	INDOOR, OUTDOOR, B CLASS
9. DESIGN TEMPERATURE RISE(BY RESISTANCE)	80 ℃
10. FULL LOAD SPEED	830 RPM
11. FULL LOAD CURRENT	7.95 A
12. LOCKED ROTOR CURRENT	41.1 A
13. MINIMUM STARTING VOLTAGE	198 V
14. EFFICIENCY AT 100% RATED LOAD	71.0 %
15. POWER FACTOR AT 100% RATED LOAD	51.5 %
16. STARTING TORQUE	2.85 KG.M
17. SITE ALTITUDE(UNDER)	1000 M
18. ENCLOSURE & COOLING METHOD	T E N V
19. TYPE OF BEARING	PL : 6208zz OPL : 6206zz
20. MOUNTING	H O R I Z O N T A L
21. MAXIMUM AMBIENT TEMPERATURE	40 ℃
22. BEARING LUBRICATION	G R E A S E
23. STARTING METHOD	F U L L V O L T A G E

192.168.11.51 / 2020-06-11 16:27:42

불법복제 및 배포금지

THREE PHASE INDUCTION MOTOR DATA SHEET

SCHEDULE OF TECHNICAL DATA

1. SERVICE	HOISTING
2. MANUFACTURE	극동 호이스트 (주)
3. FRAME NUMBER	112 S
4. RATED POWER	1.1 KW x 8 P
5. RATED VOLTAGE AND FREQUENCY	380 V 60 Hz
6. MOTOR TYPE	SQUIRREL CAGE ROTOR TYPE
7. SERVICE FACTOR AND RATTING	1 . 0 , 30 MIN
8. LOCATION AND INSULATION CLASS	INDOOR, OUTDOOR, B CLASS
9. DESIGN TEMPERATURE RISE(BY RESISTANCE)	80 ℃
10. FULL LOAD SPEED	830 RPM
11. FULL LOAD CURRENT	4.57 A
12. LOCKED ROTOR CURRENT	23.8 A
13. MINIMUM STARTING VOLTAGE	342 V
14. EFFICIENCY AT 100% RATED LOAD	71.0 %
15. POWER FACTOR AT 100% RATED LOAD	51.5 %
16. STARTING TORQUE	2.85 KG.M
17. SITE ALTITUDE(UNDER)	1000 M
18. ENCLOSURE & COOLING METHOD	T E N V
19. TYPE OF BEARING	PL : 6208zz OPL : 6206zz
20. MOUNTING	H O R I Z O N T A L
21. MAXIMUM AMBIENT TEMPERATURE	40 ℃
22. BEARING LUBRICATION	G R E A S E
23. STARTING METHOD	F U L L V O L T A G E

192.168.11.51 / 2020-06-11 16:27:42

불법복제 및 배포금지

THREE PHASE INDUCTION MOTOR DATA SHEET

SCHEDULE OF TECHNICAL DATA

1. SERVICE	HOISTING
2. MANUFACTURE	극동 호이스트 (주)
3. FRAME NUMBER	112 S
4. RATED POWER	1.1 KW x 8 P
5. RATED VOLTAGE AND FREQUENCY	440 V 60 Hz
6. MOTOR TYPE	SQUIRREL CAGE ROTOR TYPE
7. SERVICE FACTOR AND RATTING	1 . 0 , 30 MIN
8. LOCATION AND INSULATION CLASS	INDOOR, OUTDOOR, B CLASS
9. DESIGN TEMPERATURE RISE(BY RESISTANCE)	80 ℃
10. FULL LOAD SPEED	830 RPM
11. FULL LOAD CURRENT	3.95 A
12. LOCKED ROTOR CURRENT	20.55 A
13. MINIMUM STARTING VOLTAGE	396 V
14. EFFICIENCY AT 100% RATED LOAD	71.0 %
15. POWER FACTOR AT 100% RATED LOAD	51.5 %
16. STARTING TORQUE	2.85 KG.M
17. SITE ALTITUDE(UNDER)	1000 M
18. ENCLOSURE & COOLING METHOD	T E N V
19. TYPE OF BEARING	PL : 6208zz OPL : 6006zz
20. MOUNTING	H O R I Z O N T A L
21. MAXIMUM AMBIENT TEMPERATURE	40 ℃
22. BEARING LUBRICATION	G R E A S E
23. STARTING METHOD	F U L L V O L T A G E

192.168.11.51 / 2020-06-11 16:27:42

불법복제 및 배포금지

THREE PHASE INDUCTION MOTOR DATA SHEET

SCHEDULE OF TECHNICAL DATA

1. SERVICE	HOISTING
2. MANUFACTURE	극동 호이스트 (주)
3. FRAME NUMBER	112 S
4. RATED POWER	1.1 KW x 8 P
5. RATED VOLTAGE AND FREQUENCY	460 V 60 Hz
6. MOTOR TYPE	SQUIRREL CAGE ROTOR TYPE
7. SERVICE FACTOR AND RATTING	1 . 0 , 30 MIN
8. LOCATION AND INSULATION CLASS	INDOOR, OUTDOOR, B CLASS
9. DESIGN TEMPERATURE RISE(BY RESISTANCE)	80 ℃
10. FULL LOAD SPEED	830 RPM
11. FULL LOAD CURRENT	3.7 A
12. LOCKED ROTOR CURRENT	18.73 A
13. MINIMUM STARTING VOLTAGE	414 V
14. EFFICIENCY AT 100% RATED LOAD	71.0 %
15. POWER FACTOR AT 100% RATED LOAD	51.5 %
16. STARTING TORQUE	2.85 KG.M
17. SITE ALTITUDE(UNDER)	1000 M
18. ENCLOSURE & COOLING METHOD	T E N V
19. TYPE OF BEARING	PL : 6208zz OPL : 6006zz
20. MOUNTING	H O R I Z O N T A L
21. MAXIMUM AMBIENT TEMPERATURE	40 ℃
22. BEARING LUBRICATION	G R E A S E
23. STARTING METHOD	F U L L V O L T A G E

192.168.11.51 / 2020-06-11 16:27:42

불법복제 및 배포금지

THREE PHASE INDUCTION MOTOR DATA SHEET

SCHEDULE OF TECHNICAL DATA

1. SERVICE	HOISTING
2. MANUFACTURE	극동 호이스트 (주)
3. FRAME NUMBER	112 S
4. RATED POWER	1.1 KW x 8 P
5. RATED VOLTAGE AND FREQUENCY	480 V 60 Hz
6. MOTOR TYPE	SQUIRREL CAGE ROTOR TYPE
7. SERVICE FACTOR AND RATTING	1 . 0 , 30 MIN
8. LOCATION AND INSULATION CLASS	INDOOR, OUTDOOR, B CLASS
9. DESIGN TEMPERATURE RISE(BY RESISTANCE)	80 ℃
10. FULL LOAD SPEED	830 RPM
11. FULL LOAD CURRENT	3.6 A
12. LOCKED ROTOR CURRENT	18.53 A
13. MINIMUM STARTING VOLTAGE	432 V
14. EFFICIENCY AT 100% RATED LOAD	71.0 %
15. POWER FACTOR AT 100% RATED LOAD	51.5 %
16. STARTING TORQUE	2.85 KG.M
17. SITE ALTITUDE(UNDER)	1000 M
18. ENCLOSURE & COOLING METHOD	T E N V
19. TYPE OF BEARING	PL : 6208zz OPL : 6006zz
20. MOUNTING	H O R I Z O N T A L
21. MAXIMUM AMBIENT TEMPERATURE	40 ℃
22. BEARING LUBRICATION	G R E A S E
23. STARTING METHOD	F U L L V O L T A G E

192.168.11.51 / 2020-06-11 16:27:42

불법복제 및 배포금지

THREE PHASE INDUCTION MOTOR DATA SHEET

SCHEDULE OF TECHNICAL DATA

1. SERVICE	TRAVERSING
2. MANUFACTURE	극동 호이스트 (주)
3. FRAME NUMBER	90 S
4. RATED POWER	0.75 KW x 4 P
5. RATED VOLTAGE AND FREQUENCY	220 V 60 Hz
6. MOTOR TYPE	SQUIRREL CAGE ROTOR TYPE
7. SERVICE FACTOR AND RATTING	1 . 0 , 30 MIN
8. LOCATION AND INSULATION CLASS	INDOOR, OUTDOOR, B CLASS
9. DESIGN TEMPERATURE RISE(BY RESISTANCE)	80 ℃
10. FULL LOAD SPEED	1760 RPM
11. FULL LOAD CURRENT	4.1 A
12. STARTING CURRENT AT RATED VOLTAGE	22.1 A
13. MINIMUM STARTING VOLTAGE	198 V
14. EFFICIENCY AT 100% RATED LOAD	66.0 %
15. POWER FACTOR AT 100% RATED LOAD	73.5 %
16. STARTING TORQUE	1.02 KG.M
17. SITE ALTITUDE(UNDER)	1000 M
18. ENCLOSURE & COOLING METHOD	T E N V
19. TYPE OF BEARING	PL : 6205zz OPL : 6204zz
20. MOUNTING	H O R I Z O N T A L
21. MAXIMUM AMBIENT TEMPERATURE	40 ℃
22. BEARING LUBRICATION	G R E A S E
23. STARTING METHOD	F U L L V O L T A G E

192.168.11.51 / 2020-06-11 16:27:42

불법복제 및 배포금지

THREE PHASE INDUCTION MOTOR DATA SHEET

SCHEDULE OF TECHNICAL DATA

1. SERVICE	TRAVERSING
2. MANUFACTURE	극동 호이스트 (주)
3. FRAME NUMBER	90 S
4. RATED POWER	0.75 KW x 4 P
5. RATED VOLTAGE AND FREQUENCY	380 V 60 Hz
6. MOTOR TYPE	SQUIRREL CAGE ROTOR TYPE
7. SERVICE FACTOR AND RATTING	1 . 0 , 30 MIN
8. LOCATION AND INSULATION CLASS	INDOOR, OUTDOOR, B CLASS
9. DESIGN TEMPERATURE RISE(BY RESISTANCE)	80 ℃
10. FULL LOAD SPEED	1760 RPM
11. FULL LOAD CURRENT	2.4 A
12. STARTING CURRENT AT RATED VOLTAGE	13.5 A
13. MINIMUM STARTING VOLTAGE	342 V
14. EFFICIENCY AT 100% RATED LOAD	67.0 %
15. POWER FACTOR AT 100% RATED LOAD	69.5 %
16. STARTING TORQUE	0.85 KG.M
17. SITE ALTITUDE(UNDER)	1000 M
18. ENCLOSURE & COOLING METHOD	T E N V
19. TYPE OF BEARING	PL : 6205zz OPL : 6204zz
20. MOUNTING	H O R I Z O N T A L
21. MAXIMUM AMBIENT TEMPERATURE	40 ℃
22. BEARING LUBRICATION	G R E A S E
23. STARTING METHOD	F U L L V O L T A G E

192.168.11.51 / 2020-06-11 16:27:42

불법복제 및 배포금지

THREE PHASE INDUCTION MOTOR DATA SHEET

SCHEDULE OF TECHNICAL DATA

1. SERVICE	TRAVERSING
2. MANUFACTURE	극동 호이스트 (주)
3. FRAME NUMBER	90 S
4. RATED POWER	0.75 KW x 4 P
5. RATED VOLTAGE AND FREQUENCY	440 V 60 Hz
6. MOTOR TYPE	SQUIRREL CAGE ROTOR TYPE
7. SERVICE FACTOR AND RATTING	1 . 0 , 30 MIN
8. LOCATION AND INSULATION CLASS	INDOOR, OUTDOOR, B CLASS
9. DESIGN TEMPERATURE RISE(BY RESISTANCE)	80 ℃
10. FULL LOAD SPEED	1760 RPM
11. FULL LOAD CURRENT	2.0 A
12. STARTING CURRENT AT RATED VOLTAGE	11.1 A
13. MINIMUM STARTING VOLTAGE	396 V
14. EFFICIENCY AT 100% RATED LOAD	67.0 %
15. POWER FACTOR AT 100% RATED LOAD	73.5 %
16. STARTING TORQUE	1.02 KG.M
17. SITE ALTITUDE(UNDER)	1000 M
18. ENCLOSURE & COOLING METHOD	T E N V
19. TYPE OF BEARING	PL : 6205zz OPL : 6204zz
20. MOUNTING	H O R I Z O N T A L
21. MAXIMUM AMBIENT TEMPERATURE	40 ℃
22. BEARING LUBRICATION	G R E A S E
23. STARTING METHOD	F U L L V O L T A G E

192.168.11.51 / 2020-06-11 16:27:42

불법복제 및 배포금지

THREE PHASE INDUCTION MOTOR DATA SHEET

SCHEDULE OF TECHNICAL DATA

1. SERVICE	TRAVERSING
2. MANUFACTURE	극동 호이스트 (주)
3. FRAME NUMBER	90 S
4. RATED POWER	0.75 KW x 4 P
5. RATED VOLTAGE AND FREQUENCY	460 V 60 Hz
6. MOTOR TYPE	SQUIRREL CAGE ROTOR TYPE
7. SERVICE FACTOR AND RATTING	1 . 0 , 30 MIN
8. LOCATION AND INSULATION CLASS	INDOOR, OUTDOOR, B CLASS
9. DESIGN TEMPERATURE RISE(BY RESISTANCE)	80 ℃
10. FULL LOAD SPEED	1760 RPM
11. FULL LOAD CURRENT	2.0 A
12. STARTING CURRENT AT RATED VOLTAGE	10.6 A
13. MINIMUM STARTING VOLTAGE	414 V
14. EFFICIENCY AT 100% RATED LOAD	66.0 %
15. POWER FACTOR AT 100% RATED LOAD	73.5 %
16. STARTING TORQUE	1.02 KG.M
17. SITE ALTITUDE(UNDER)	1000 M
18. ENCLOSURE & COOLING METHOD	T E N V
19. TYPE OF BEARING	PL : 6205zz OPL : 6204zz
20. MOUNTING	H O R I Z O N T A L
21. MAXIMUM AMBIENT TEMPERATURE	40 ℃
22. BEARING LUBRICATION	G R E A S E
23. STARTING METHOD	F U L L V O L T A G E

192.168.11.51 / 2020-06-11 16:27:42

불법복제 및 배포금지

THREE PHASE INDUCTION MOTOR DATA SHEET

SCHEDULE OF TECHNICAL DATA

1. SERVICE	TRAVERSING
2. MANUFACTURE	극동 호이스트 (주)
3. FRAME NUMBER	90 S
4. RATED POWER	0.75 KW x 4 P
5. RATED VOLTAGE AND FREQUENCY	480 V 60 Hz
6. MOTOR TYPE	SQUIRREL CAGE ROTOR TYPE
7. SERVICE FACTOR AND RATTING	1 . 0 , 30 MIN
8. LOCATION AND INSULATION CLASS	INDOOR, OUTDOOR, B CLASS
9. DESIGN TEMPERATURE RISE(BY RESISTANCE)	80 ℃
10. FULL LOAD SPEED	1760 RPM
11. FULL LOAD CURRENT	1.9 A
12. STARTING CURRENT AT RATED VOLTAGE	10.2 A
13. MINIMUM STARTING VOLTAGE	432 V
14. EFFICIENCY AT 100% RATED LOAD	66.0 %
15. POWER FACTOR AT 100% RATED LOAD	73.5 %
16. STARTING TORQUE	1.02 KG.M
17. SITE ALTITUDE(UNDER)	1000 M
18. ENCLOSURE & COOLING METHOD	T E N V
19. TYPE OF BEARING	PL : 6205zz OPL : 6204zz
20. MOUNTING	H O R I Z O N T A L
21. MAXIMUM AMBIENT TEMPERATURE	40 ℃
22. BEARING LUBRICATION	G R E A S E
23. STARTING METHOD	F U L L V O L T A G E

192.168.11.51 / 2020-06-11 16:27:42

불법복제 및 배포금지

THREE PHASE INDUCTION MOTOR DATA SHEET

SCHEDULE OF TECHNICAL DATA

1. SERVICE	TRAVERSING
2. MANUFACTURE	극동 호이스트 (주)
3. FRAME NUMBER	90 S
4. RATED POWER	0.5 KW x 6 P
5. RATED VOLTAGE AND FREQUENCY	220 V 60 Hz
6. MOTOR TYPE	SQUIRREL CAGE ROTOR TYPE
7. SERVICE FACTOR AND RATTING	1 . 0 , 30 MIN
8. LOCATION AND INSULATION CLASS	INDOOR, OUTDOOR, B CLASS
9. DESIGN TEMPERATURE RISE(BY RESISTANCE)	80 ℃
10. FULL LOAD SPEED	1160 RPM
11. FULL LOAD CURRENT	3.4 A
12. STARTING CURRENT AT RATED VOLTAGE	16.4 A
13. MINIMUM STARTING VOLTAGE	198 V
14. EFFICIENCY AT 100% RATED LOAD	64.0 %
15. POWER FACTOR AT 100% RATED LOAD	59.5 %
16. STARTING TORQUE	0.80 KG.M
17. SITE ALTITUDE(UNDER)	1000 M
18. ENCLOSURE & COOLING METHOD	T E N V
19. TYPE OF BEARING	PL : 6205zz OPL : 6204zz
20. MOUNTING	H O R I Z O N T A L
21. MAXIMUM AMBIENT TEMPERATURE	40 ℃
22. BEARING LUBRICATION	G R E A S E
23. STARTING METHOD	F U L L V O L T A G E

192.168.11.51 / 2020-06-11 16:27:42

불법복제 및 배포금지

THREE PHASE INDUCTION MOTOR DATA SHEET

SCHEDULE OF TECHNICAL DATA

1. SERVICE	TRAVERSING
2. MANUFACTURE	극동 호이스트 (주)
3. FRAME NUMBER	90 S
4. RATED POWER	0.5 KW x 6 P
5. RATED VOLTAGE AND FREQUENCY	380 V 60 Hz
6. MOTOR TYPE	SQUIRREL CAGE ROTOR TYPE
7. SERVICE FACTOR AND RATTING	1 . 0 , 30 MIN
8. LOCATION AND INSULATION CLASS	INDOOR, OUTDOOR, B CLASS
9. DESIGN TEMPERATURE RISE(BY RESISTANCE)	80 ℃
10. FULL LOAD SPEED	1160 RPM
11. FULL LOAD CURRENT	2.0 A
12. STARTING CURRENT AT RATED VOLTAGE	9.5 A
13. MINIMUM STARTING VOLTAGE	342 V
14. EFFICIENCY AT 100% RATED LOAD	64.0 %
15. POWER FACTOR AT 100% RATED LOAD	59.5 %
16. STARTING TORQUE	0.80 KG.M
17. SITE ALTITUDE(UNDER)	1000 M
18. ENCLOSURE & COOLING METHOD	T E N V
19. TYPE OF BEARING	PL : 6205zz OPL : 6204zz
20. MOUNTING	H O R I Z O N T A L
21. MAXIMUM AMBIENT TEMPERATURE	40 ℃
22. BEARING LUBRICATION	G R E A S E
23. STARTING METHOD	F U L L V O L T A G E

192.168.11.51 / 2020-06-11 16:27:42

불법복제 및 배포금지

THREE PHASE INDUCTION MOTOR DATA SHEET

SCHEDULE OF TECHNICAL DATA

1. SERVICE	TRAVERSING
2. MANUFACTURE	극동 호이스트 (주)
3. FRAME NUMBER	90 S
4. RATED POWER	0.5 KW x 6 P
5. RATED VOLTAGE AND FREQUENCY	440 V 60 Hz
6. MOTOR TYPE	SQUIRREL CAGE ROTOR TYPE
7. SERVICE FACTOR AND RATTING	1 . 0 , 30 MIN
8. LOCATION AND INSULATION CLASS	INDOOR, OUTDOOR, B CLASS
9. DESIGN TEMPERATURE RISE(BY RESISTANCE)	80 ℃
10. FULL LOAD SPEED	1160 RPM
11. FULL LOAD CURRENT	1.7 A
12. STARTING CURRENT AT RATED VOLTAGE	8.2 A
13. MINIMUM STARTING VOLTAGE	396 V
14. EFFICIENCY AT 100% RATED LOAD	64.0 %
15. POWER FACTOR AT 100% RATED LOAD	59.5 %
16. STARTING TORQUE	0.80 KG.M
17. SITE ALTITUDE(UNDER)	1000 M
18. ENCLOSURE & COOLING METHOD	T E N V
19. TYPE OF BEARING	PL : 6205zz OPL : 6204zz
20. MOUNTING	H O R I Z O N T A L
21. MAXIMUM AMBIENT TEMPERATURE	40 ℃
22. BEARING LUBRICATION	G R E A S E
23. STARTING METHOD	F U L L V O L T A G E

192.168.11.51 / 2020-06-11 16:27:42

불법복제 및 배포금지

THREE PHASE INDUCTION MOTOR DATA SHEET

SCHEDULE OF TECHNICAL DATA

1. SERVICE	TRAVERSING
2. MANUFACTURE	극동 호이스트 (주)
3. FRAME NUMBER	90 S
4. RATED POWER	0.5 KW x 6 P
5. RATED VOLTAGE AND FREQUENCY	460 V 60 Hz
6. MOTOR TYPE	SQUIRREL CAGE ROTOR TYPE
7. SERVICE FACTOR AND RATTING	1 . 0 , 30 MIN
8. LOCATION AND INSULATION CLASS	INDOOR, OUTDOOR, B CLASS
9. DESIGN TEMPERATURE RISE(BY RESISTANCE)	80 ℃
10. FULL LOAD SPEED	1160 RPM
11. FULL LOAD CURRENT	1.7 A
12. STARTING CURRENT AT RATED VOLTAGE	7.9 A
13. MINIMUM STARTING VOLTAGE	414 V
14. EFFICIENCY AT 100% RATED LOAD	64.0 %
15. POWER FACTOR AT 100% RATED LOAD	59.5 %
16. STARTING TORQUE	0.80 KG.M
17. SITE ALTITUDE(UNDER)	1000 M
18. ENCLOSURE & COOLING METHOD	T E N V
19. TYPE OF BEARING	PL : 6205zz OPL : 6204zz
20. MOUNTING	H O R I Z O N T A L
21. MAXIMUM AMBIENT TEMPERATURE	40 ℃
22. BEARING LUBRICATION	G R E A S E
23. STARTING METHOD	F U L L V O L T A G E

192.168.11.51 / 2020-06-11 16:27:42

불법복제 및 배포금지

THREE PHASE INDUCTION MOTOR DATA SHEET

SCHEDULE OF TECHNICAL DATA

1. SERVICE	TRAVERSING
2. MANUFACTURE	극동 호이스트 (주)
3. FRAME NUMBER	90 S
4. RATED POWER	0.5 KW x 6 P
5. RATED VOLTAGE AND FREQUENCY	480 V 60 Hz
6. MOTOR TYPE	SQUIRREL CAGE ROTOR TYPE
7. SERVICE FACTOR AND RATTING	1 . 0 , 30 MIN
8. LOCATION AND INSULATION CLASS	INDOOR, OUTDOOR, B CLASS
9. DESIGN TEMPERATURE RISE(BY RESISTANCE)	80 ℃
10. FULL LOAD SPEED	1160 RPM
11. FULL LOAD CURRENT	1.6 A
12. STARTING CURRENT AT RATED VOLTAGE	7.5 A
13. MINIMUM STARTING VOLTAGE	432 V
14. EFFICIENCY AT 100% RATED LOAD	64.0 %
15. POWER FACTOR AT 100% RATED LOAD	59.5 %
16. STARTING TORQUE	0.80 KG.M
17. SITE ALTITUDE(UNDER)	1000 M
18. ENCLOSURE & COOLING METHOD	T E N V
19. TYPE OF BEARING	PL : 6205zz OPL : 6204zz
20. MOUNTING	H O R I Z O N T A L
21. MAXIMUM AMBIENT TEMPERATURE	40 ℃
22. BEARING LUBRICATION	G R E A S E
23. STARTING METHOD	F U L L V O L T A G E

192.168.11.51 / 2020-06-11 16:27:42